PlayStation™

NTSC | U/C

BATTLE ARENA TOSHINDEN™ 2

PlayStation™

TEEN

AGES 13+

SLUS-00220
6583

INSTRUCTION MANUAL

TAKARA®

PLAYMATES INTERACTIVE ENTERTAINMENT PIE

Thank you for purchasing "Toshinden™ 2." "Toshinden 2" is a software product made exclusively for the Sony PlayStation™. Before using this product, please take time to read this Guide and the precautionary labels, handling, and usage precautions. Please use this product correctly and store this Guide in a safe place.

HANDLING YOUR PLAYSTATION DISC:

This compact disc is intended for use only with the PlayStation game console.

- Do not bend it, crush it, or submerge it in liquids.
- Do not leave it in direct sunlight or other source of heat.
- Be sure to take an occasional rest during extended play.
- Keep this compact disc clean. Always hold the disc by the edges and keep it in its protective case when not in use.
- Clean the disc with a lint-free, soft dry cloth, wiping in straight lines from center to outer edge. Never use solvents or abrasive cleansers.

WARNING: READ BEFORE USING YOUR PlayStation GAME CONSOLE.

EPILEPSY WARNING:
A very small percentage of individuals may experience epileptic seizures when exposed to certain light patterns or flashing lights. Exposure to certain patterns or backgrounds on a television screen or while playing video games, including games played on the PlayStation game console, may induce an epileptic seizure in these individuals. Certain conditions may induce previously undetected epileptic symptoms even in persons who have no history of prior seizures or epilepsy. If you or anyone in your family has an epileptic condition, consult your physician prior to playing. If you experience any of the following symptoms, while playing a video game - dizziness, altered vision, eye or muscle twitches, loss of awareness, disorientation, any involuntary movement or convulsions - IMMEDIATELY discontinue use and consult your physician before resuming play.

THIS PRODUCT HAS BEEN RATED BY THE ENTERTAINMENT SOFTWARE RATING BOARD. FOR INFORMATION ABOUT THE ERSB RATING, OR TO COMMENT ABOUT THE APPROPRIATENESS OF THE RATING, PLEASE CONTACT THE ERSB AT 1-800-771-3772.

WARNING TO OWNERS OF PROJECTION TELEVISIONS: STILL PICTURES OR IMAGES MAY CAUSE PERMANENT PICTURE-TUBE DAMAGE OR MARK THE PHOSPHOR OF THE CRT. AVOID REPEATED OR EXTENDED USE OF VIDEO GAMES ON LARGE-SCREEN PROJECTION TELEVISIONS. REFER TO YOUR PROJECTION TV INSTRUCTION MANUAL FOR MORE DETAILS.

Distributed exclusively by

Item No.6583

Playmates Interactive Entertainment
16200 S. Trojan Way
La Mirada, CA 90638
(310) 407-1490

Battle Arena Toshinden 2 and all character names and distinctive likenesses thereof are trademarks of Takara Co., Ltd. ©Takara Co., Ltd. 1996. Programmed © Tamsoft 1996. All rights reserved. PIE™ is a trademark of Playmates Interactive Entertainment.

BATTLE ARENA TOSHINDEN 2™

TABLE OF CONTENTS

Toshinden Story 3

Controller Operation 3-4

Operating the Characters 5-6

Game Rules 6

Game Modes 7

Screen Indicators 7

Overdrive Gauge 8

Playing the 1P Game 8

Joining a Game in Mid-Play 8

Playing the VS Game 9

Option Modes 9-10

Special Moves for the Characters 11-14

Character Profiles and Commands 15-25

Credits 26

Notes 27-28

Warranty Information 29-30

THE TOSHINDEN STORY

The Toshinden is a secret tournament of fighting gods, governed by the secret and powerful organization Himitsu Kessha. A year ago, Gaia™ (one of the fighters), organized a tournament without the knowledge or consent of the Himitsu Kessha.

Because of this, the Himitsu Kessha now considers Gaia a traitor, and wants him eliminated. This is the motivation for organizing another Toshinden—to lure Gaia to his last battle. It is this arena of evil in which you are about to enter.

CONTROLLER OPERATION

NOTE: *Playing "Toshinden 2" against another player requires the separate purchase of another controller.*

In "Toshinden 2," the PlayStation controller can be operated as follows.

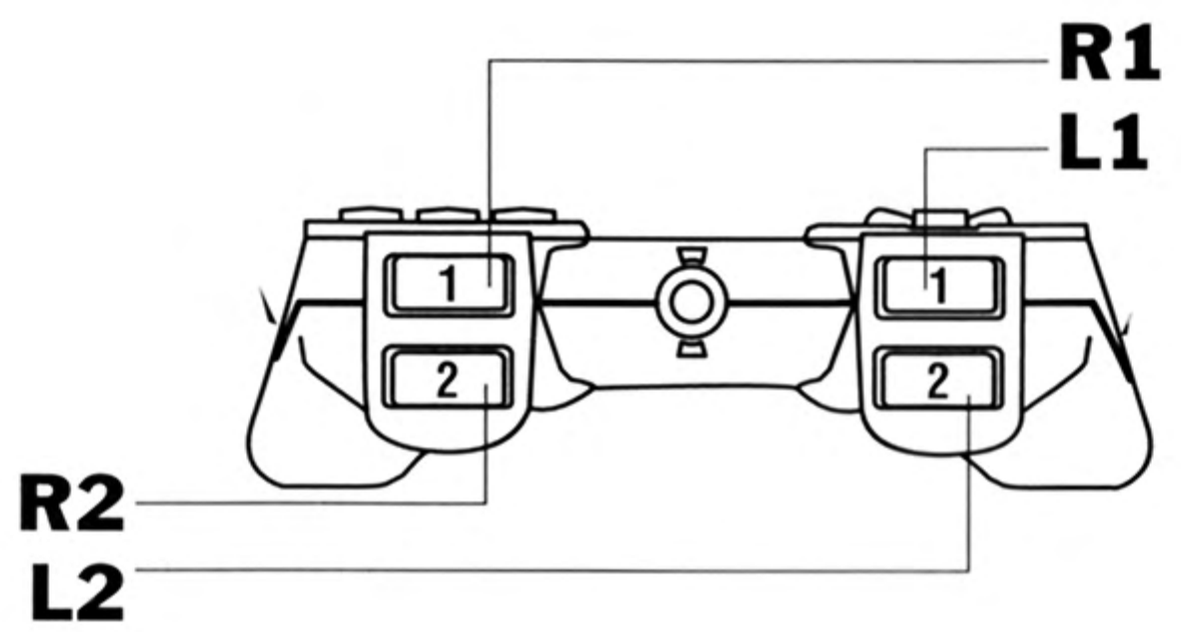

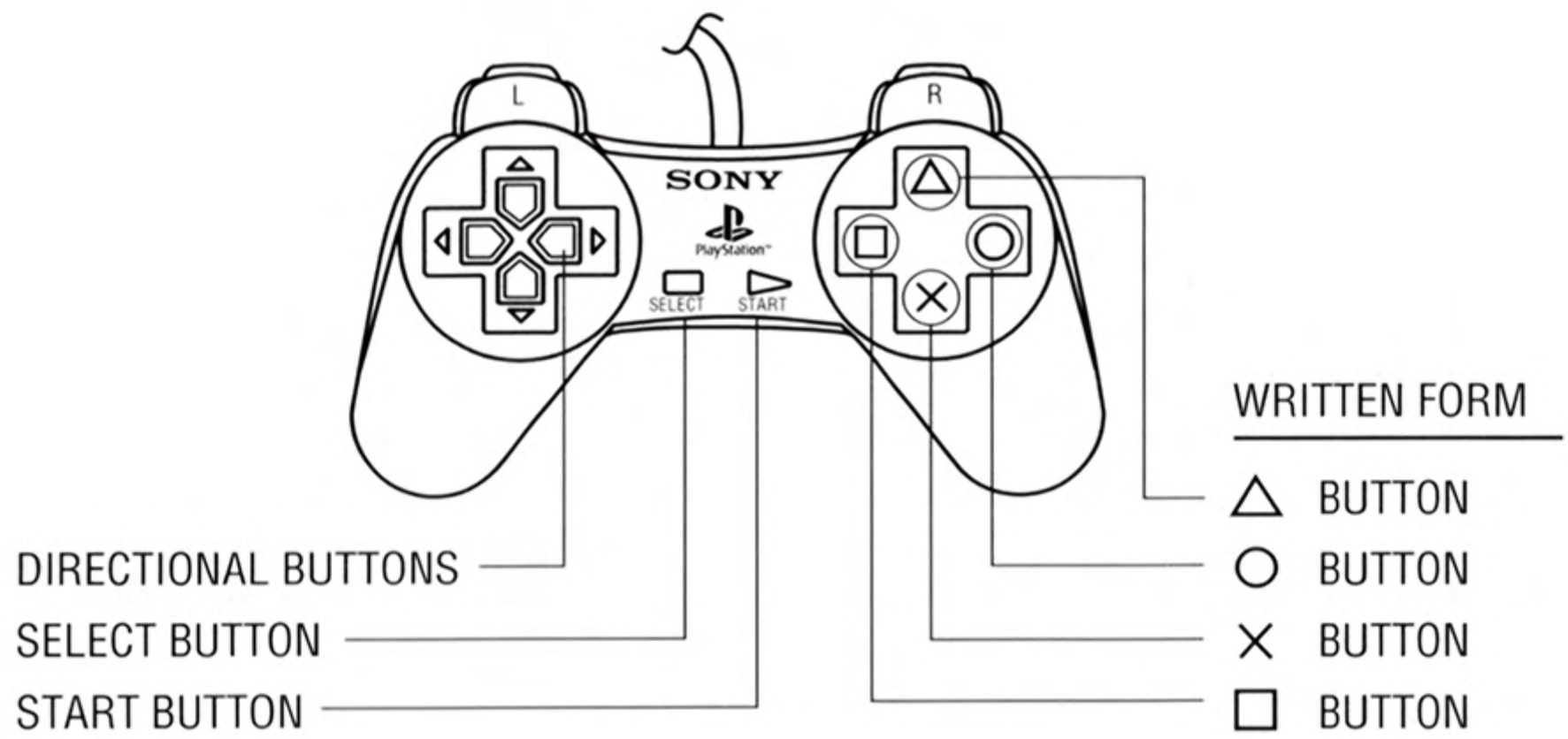

- □ and △ Buttons: Perform weapon attacks.*
- × and ○ Circle Buttons: Perform kicking attacks.*
- **L1,** and **L2** Buttons: Perform rolling actions.*
- **R1,** and **R2** Buttons: Perform special moves.*

- **Start Button:**
  1. In the Title screen, selects game mode and starts the game.
  2. In the Option screen, returns to the Title screen.
  3. In the Combat screen, pauses the game. Press a second time to release the pause.
  4. If a second player wishes to join a 1P game, pressing start on the second controller enables him to join the game.

- **Select Button:**
  1. When the game is paused, use the select button to select game options.
  2. A second player can use the select button on his controller to initiate a challenge.

**in default mode*

OPERATING THE CHARACTERS

Button Operations are configured below for characters facing right:

BUTTON COMBO(S)	REACTION
← ↖ ↙	Upper Defense
↑ ↖ ↗	Jump
→	Move Forward
↘	Crouch Forward
↓	Crouch
↙	Lower Defense
←	Move Backwards

ATTACK STRENGTHS

There are two types of attacks: Weak Attack and Hard Attack. Weak Attacks are quick attacks that don't produce a great deal of damage but keep your fighter well-guarded from his or her opponent. Hard Attacks produce greater damage, but because they use bigger motions, they leave your fighter more vulnerable to counter-attack. Special moves differ in speed and effect, depending on whether it is a Weak Attack or a Hard Attack move.

DEFENSE

When your fighter is on the ground and not attacking, press the directional keys away from your opponent to block his or her attacks. A normal attack will not inflict damage if it is defended. A special move, however, will inflict damage to some degree even if it is defended. You cannot defend yourself against a throw move. There are two types of defense: Upper Defense and Lower Defense.

Upper Body Defense

Use Upper Body Defense to defend against special moves and attacks when your opponent is attacking the upper portion of your fighter's body. Upper Body attacks can come from an opponent who is either standing or crouching, depending on the character and his or her moves. Upper Body Defense also defends against jump attacks.

Lower Body Defense

Use Lower Body Defense to defend against special moves and attacks when your opponent is attacking your feet. Lower Body attacks can come from an opponent who is either standing or crouching, depending on the character and his or her moves.

SPECIAL NOTE: *A throw move cannot be defended against!*

GAME RULES

The winner of the battle is determined according to the following rules:

1. Reducing the opposing character's energy level to "0" so that he can no longer stand is considered a win by knockout and is good for 1 point.

2. If a character falls out of the ring during a battle, that character loses. The character remaining in the ring will acquire 1 point.

3. In a battle with time restrictions, if the battle cannot be settled during the restricted time period, the character with the higher energy level left at the end of the battle will be the winner by decision. The winner will acquire 1 point.

4. When both characters have their energy depleted at the same time (double knockout), or when the energy level for both characters is the same at the end of a restricted time period, the game ends in a draw.

5. The character to accumulate 2 points first is the winner and moves on to the next battle. (2 points is the default)

GAME MODES

Game Modes are selected by pressing the Start Button when the intro screen is displayed or while the demo is in play. Use the directional keys to make a selection and press the Start Button to start the game.

In the 1P game mode, you will be battling 8 opponents, including warriors from the Himitsu Kessha. In the Full Battle game mode, you will be battling all 10 characters as well as boss characters.

SCREEN INDICATORS

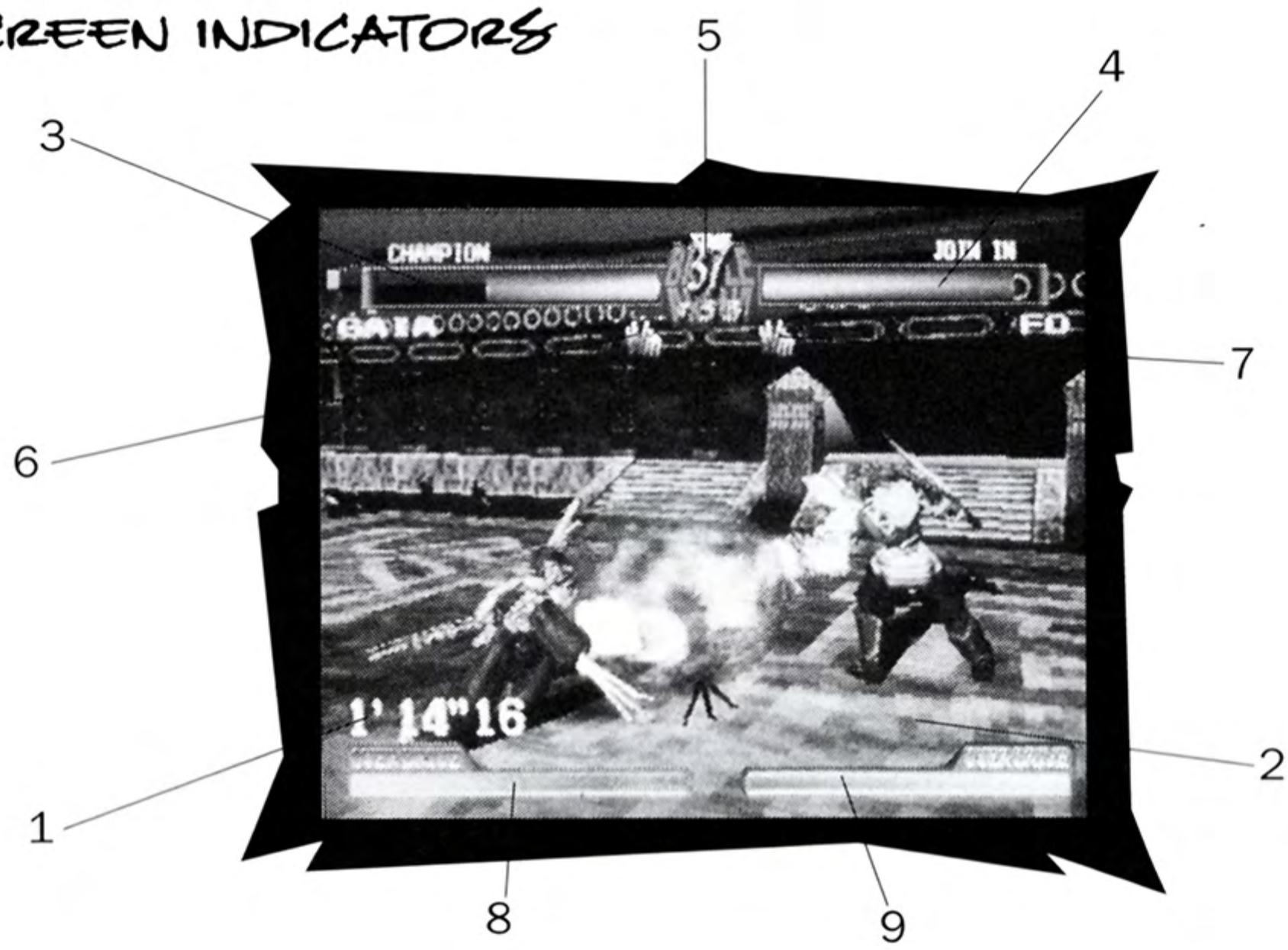

1. 1P Time Display: This is the total round time for Player 1.
2. 2P Time Display: This is the total round time for Player 2. (not pictured)
3. 1P Energy Gauge: The gauge decreases each time Player 1's character is damaged. When there is nothing left in the Energy Gauge, it is considered a loss by knockout.
4. 2P Energy Gauge: This is the Energy Gauge for 2P. It functions in the same manner as the 1P Energy Gauge.
5. Time Remaining: This displays the time remaining in the restricted time period of the battle. If there is no restriction, this is displayed as (00).
6. 1P Win Marks: This is the win mark for 1P. It will be lit for each point that is won. The first player to win 2 points is the winner.
7. 2P Win Marks: This is the Win Mark for 2P.
8. 1P Overdrive Gauge
9. 2P Overdrive Gauge

OVERDRIVE GAUGE

The gauge increases when Special Moves or attacks are performed successfully or when a character is attacked by his opponent. When it reaches its MAX stage, the gauge flashes. This MAX stage will continue for a certain period of time. While the gauge is flashing, attacks such as Special Moves are enhanced. Furthermore, "Ultimate Moves" can also be used during this time. As the gauge is flashing, it starts to decrease. When it hits zero, the overdrive state is disengaged. It is up to you to find out, through your battles, how you can best increase this gauge to achieve the Overdrive state.

PLAYING THE 1 P GAME

CHARACTER SELECTION

By selecting "1P Game" in the game mode, you will be able to play a tournament style game against characters operated by the computer. Select your character by using the directional keys and then execute your selection with the ○ Button. The computer will then choose its character and the battle begins. (Select the box to determine the characters randomly.)

1P GAME

In the "1P Game," you will face eight fighters. When all opponents are defeated, a warrior from the Himitsu Kessha will come forth.

CONTINUE

If you are defeated by an opposing character in the "1P Game," the continue screen is displayed. By pressing on the Start Button during the countdown, you will be able to restart the tournament starting with the opponent that just defeated you. Pressing a button other than the start button when the continue screen is displayed accelerates the countdown. The game will be over if you do not continue.

JOINING A GAME IN MID-PLAY

It is possible to break into a game while a "1P Game" is underway. This is done with the use of another available controller. Pressing the Start Button on the available controller selects the character that just broke in and interrupted the battle that is currently underway.

PLAYING THE VS GAME

Selecting the "VS HUMAN" game mode allows you to play against another player. On the character selection screen, select the character you wish to operate. Selecting "VS COMPUTER" allows you to play against a character that the computer operates. Select the character that you will be operating first, then select the character that the computer will be operating.

If you are defeated in the "VS HUMAN" mode, you may initiate a continue within the time limit and you will be brought to the character selection screen where you will be allowed to re-choose a character. If you are defeated in the "VS COMPUTER" mode, a continue will initiate a second chance against the same character.

OPTIONS DURING PAUSE

Pausing during a battle enables three choices: CONTINUE (continue on), OPTION (option mode), and RESET (return to title screen). Make a selection using the Select Button and press the Start Button to execute.

OPTION MODES

GAME SETTINGS AND CHANGES

Select "OPTION" from the game modes to go to the option mode screen. Here, you can make changes to different settings in the game. Move the directional keys on the controller Up and Down to select the items, Right and Left to change the settings. Press the Start Button or select EXIT to return to the title screen.

Difficulty:

This changes the level of difficulty when playing against the computer. "1" is the easiest and "8" is the most difficult.
NOTE: The Default setting is "4."

Bout Time:

This changes the length of the bout time. Choose from 60 seconds, 99 seconds or unrestricted (00).
NOTE: The Default setting is 60 seconds.

Set Point:

This changes the points required to win a battle. The first player to win the number of points set here is the winner.
NOTE: The Default setting is 2 points.

NOTE: *These options can be changed only in the main option menu, not during the game. Changing bout time during the match affects subsequent rounds.*

Opponent Life Setting:

This sets the handicap for players playing in the VS mode. The larger the number, the more defensive power a character will have and the less likely it will be for that character to be damaged. The handicap that is set here is not related to the level of difficulty that is set in the "1P GAME." NOTE: The Default setting is 100.

Defense:

Setting the guard type to auto enables a character to defend himself from an opponent automatically if that attack is defensible.

NOTE: *The Default Setting is Normal.*

CONTROLLER

R1, R2, L1 and L2 buttons can have different functions. Use the left and right directional keys to chose the functions.

Camera Type:

The battle can be shown at different camera angles.

Normal:
This camera mode is recommended during normal game play.

Long:
This relays the battle from a distance.

Sky:
This relays the whole stage from up above.

Overhead:
This relays the battle from above the characters' head.

SOUND

The sound mode can be switched between Monaural and Stereo. Change the sound type to Monaural if you are playing on a television that uses a monaural speaker. NOTE: The Default setting is Stereo.

CHARACTER SELECTION

Character selection allows you to choose to view either portraits or statistics.

NOTE: *The Default setting is Normal.*

SPECIAL MOVES FOR THE CHARACTERS

- **DASH** → →

  Press once, then keep pressed down the second time. **Character runs forward. Use to close in on an opponent.**

- **BACKSTEP** ← ←

  Character jumps backwards.

- **ROLL OVER** L1 (roll in) or L2 (roll out)

  Character moves sideways by rolling over. Use to dodge attacks.

- **DIVING ROLL** → + L1 (dive and roll in),

  → + L2 (dive and roll out)

  Character moves forward at an angle with a dive. Use to dodge attacks while closing in on an opponent.

- **DASHING DODGE** → → + L1 (forward dodge),

  → → + L2 (backward dodge)

  Character moves sideways without rolling over. Allows a character to dodge an attack quickly at a distance or to dodge an attack at close range, allowing him or her to make an attack.

- **DASH ATTACK** **A Dash Attack (charge attack) can be performed by pressing the attack button while making a dash. You can make an effective attack while closing in on an opponent.**

  → → + □ (Dash Attack w/Weak Weapon)

  → → + △ (Dash Attack w/Strong Weapon)

  → → + × (Dash Attack w/Weak Kick)

  → → + ○ (Dash Attack w/Strong Kick)

NOTE: *All L1, L2,* □, △, ×, and ○ *moves described above are for the default settings*

RISING FROM THE DOWN POSITION

When a character is down, he rises in a variety of ways as the commands below are entered. Depending on the situation, you should rise in a way that puts your character in a good position for your next attack.

NOTE: *When positioned at the edge of the battle arena, the direction in which the character rises is determined automatically to prevent him from falling out of the arena.*

- No command: rise normally
- L1: rise while rolling in
- L2: rise while rolling out
- Move directional key towards head: rise in the head direction
- Move directional key towards feet: rise in the feet direction
- Move directional key ↑ : rise with a jump
- Press □, △, ×, or ○ Buttons repetitively to accelerate your recovery from the down position

THROW MOVE

When close to an opponent, press the directional arrow away from the opponent and press the △ or ○ Buttons.

Your character is susceptible to an opponent's attack while you are performing a throw move, but if the throw move is successful, it can do great damage to your opponent.

DOWN ATTACK

When your opponent is down:

- Press the □ + × Buttons for the ***Down Attack at Close Range***.
- Press the △ + ○ Buttons for the ***Down Attack at a Distance***

Note: *Duke values chivalry and does not perform Down Attacks.*

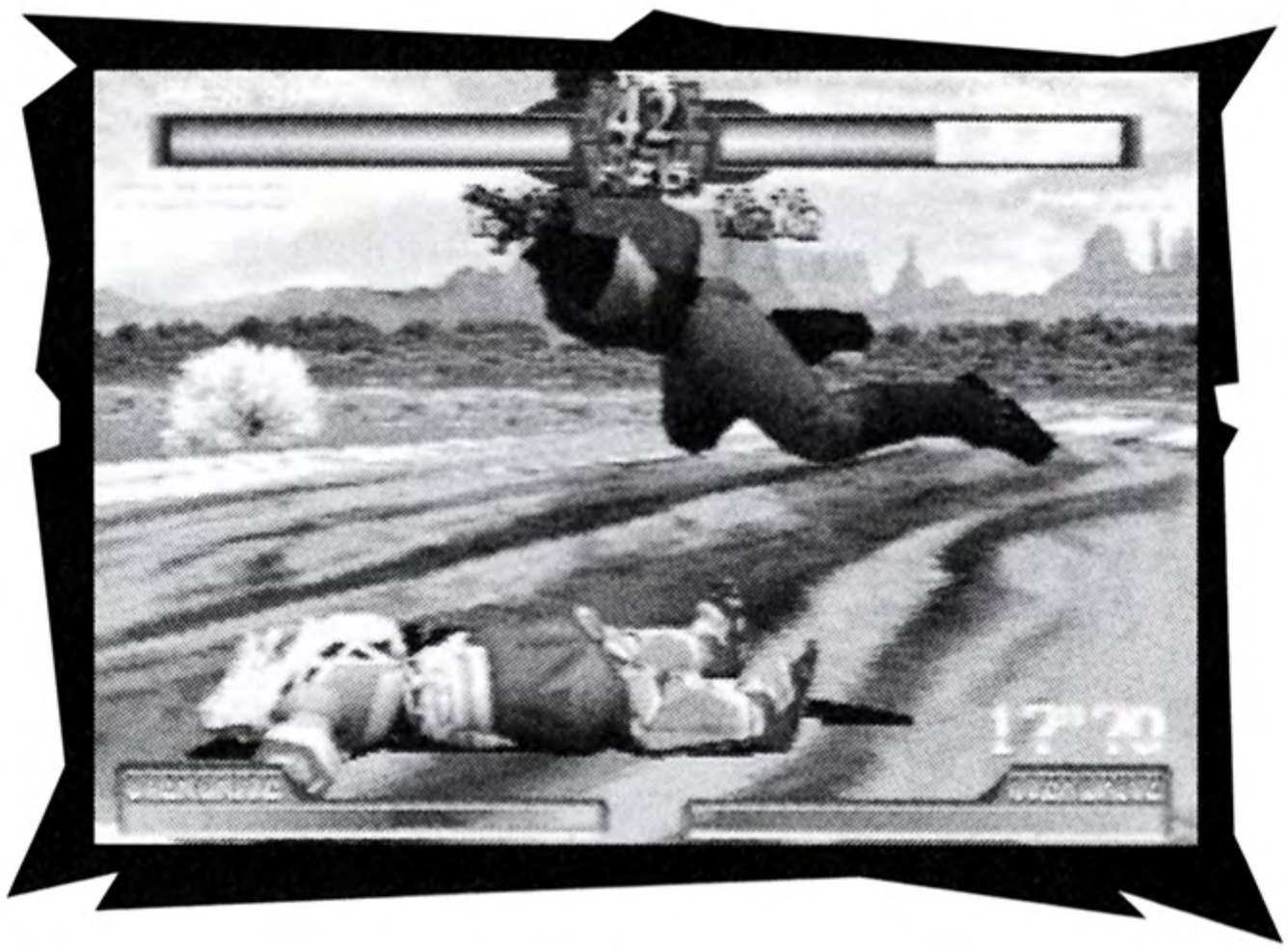

INVERTED ATTACK

There are times when a character ends up behind his opponent. In this situation, try pressing the Weapon Attack Button or the Kicking Attack Button. The character will be able to attack behind himself after he jumps over his opponent.

- Press the □ or △ Buttons for the ***Inverted Weapon Attack***.
- Press the × or ○ Buttons for the ***Inverted Kicking Attack***.
- Press ↓ + □ or △ Buttons for the ***Low Inverted Weapon Attack.***
- Press ↓ + × or ○ Buttons for the ***Low Inverted Kicking Attack.***

CHALLENGE

Press the Start Button to have your character challenge his opponent.

SPECIAL MOVES

Each character has single blow special moves that originated out of his or her own unique combat styles. (Please refer to the character introduction pages for more information.)

ULTIMATE MOVES

Ultimate moves can only be used when the Overdrive Gauge is flashing. (Please refer to the "U" mark on the character introduction pages.) For information regarding the Overdrive Gauge, please refer to page 23.

SECRET SPECIAL MOVES

These powerful special moves can be used when a character has little energy left and the Energy Gauge is flashing red. (Please refer to the "S" mark on the character introduction pages.)

SINGLE STRIKE SPECIAL MOVES

Single strike special moves allow you to perform Special Moves, Ultimate Moves and Secret Special Moves in a single keystroke. To enable Single Strike Special Moves, set the difficulty level to 1 and then assign a special move to the L1, L2, R1 and R2 buttons.

When the Overdrive Gauge is flashing, press R1 and R2 simultaneously to perform a Special Move or Secret Special Move (selected randomly). When both the Overdrive Gauge and the Energy Gauge are flashing, press R1 and R2 simultaneously to perform an Ultimate move.

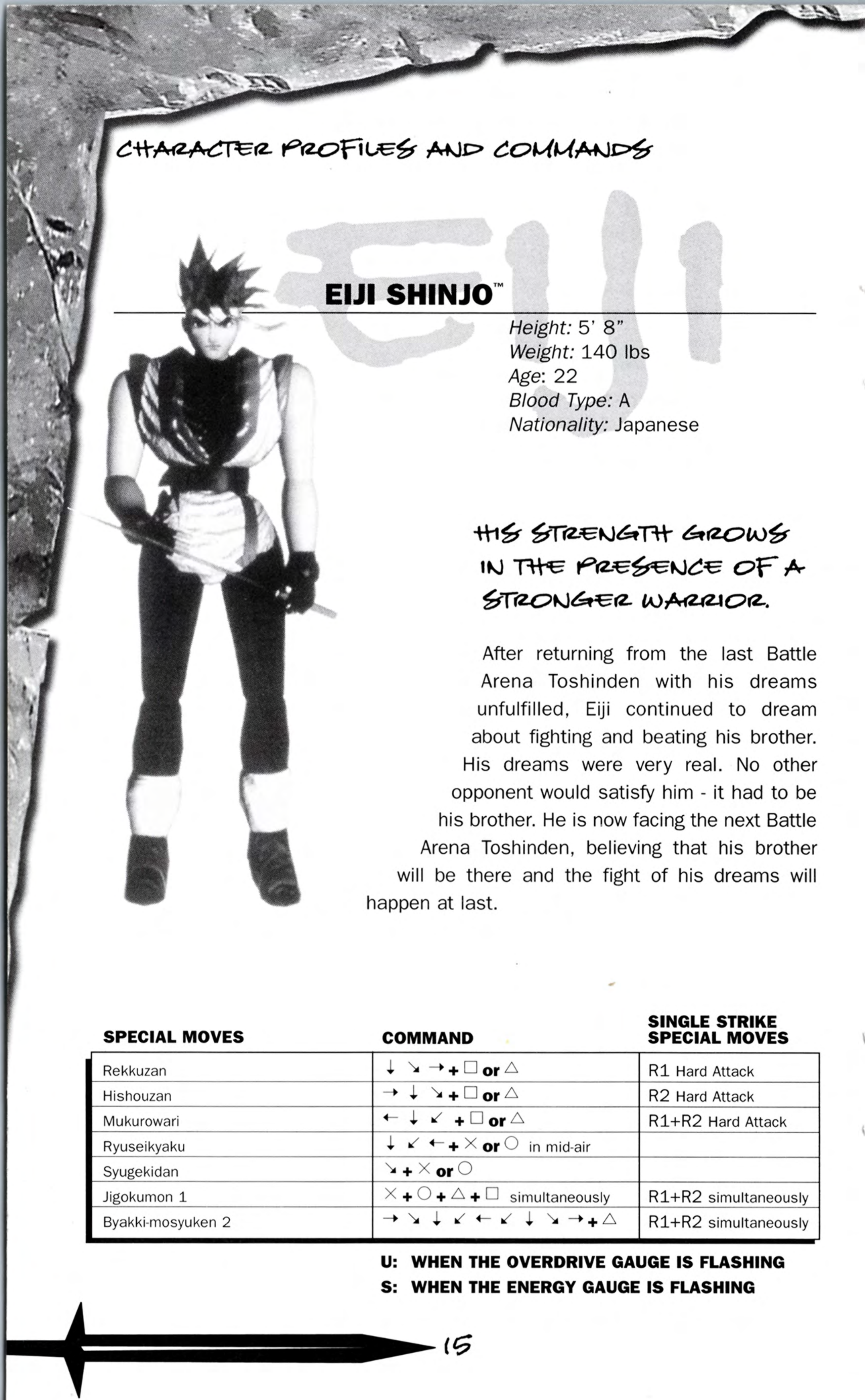

EIJI SHINJO™

Height: 5' 8"
Weight: 140 lbs
Age: 22
Blood Type: A
Nationality: Japanese

HIS STRENGTH GROWS IN THE PRESENCE OF A STRONGER WARRIOR.

After returning from the last Battle Arena Toshinden with his dreams unfulfilled, Eiji continued to dream about fighting and beating his brother. His dreams were very real. No other opponent would satisfy him - it had to be his brother. He is now facing the next Battle Arena Toshinden, believing that his brother will be there and the fight of his dreams will happen at last.

SPECIAL MOVES	COMMAND	SINGLE STRIKE SPECIAL MOVES
Rekkuzan	↓ ↘ → + □ or △	R1 Hard Attack
Hishouzan	→ ↓ ↘ + □ or △	R2 Hard Attack
Mukurowari	← ↓ ↙ + □ or △	R1+R2 Hard Attack
Ryuseikyaku	↓ ↙ ← + × or ○ in mid-air	
Syugekidan	↘ + × or ○	
Jigokumon 1	× + ○ + △ + □ simultaneously	R1+R2 simultaneously
Byakki-mosyuken 2	→ ↘ ↓ ↙ ← ↙ ↓ ↘ → + △	R1+R2 simultaneously

U: WHEN THE OVERDRIVE GAUGE IS FLASHING
S: WHEN THE ENERGY GAUGE IS FLASHING

SPECIAL MOVES	COMMAND	SINGLE STRIKE SPECIAL MOVES
Sonic Slash	↓ ↘ → + □ or △	R1 Hard Attack
Deadly Raise	→ ↓ ↘ + □ or △	R2 Hard Attack
Leg Crush	↓ ↙ ← + × or ○	R1+R2 Hard Attack
Scottish Moon	↓ ↙ ← + × or ○ in mid-air	R1+R2 Hard Attack
Vertical Slash	↘ + △	
Hells Gate 1	× + ○ + △ + □ simultaneously	R1+R2 simultaneously
Hells Inferno 2	→ ↘ ↓ ↙ ← ↙ ↓ ↘ → + △	R1+R2 simultaneously

U: WHEN THE OVERDRIVE GAUGE IS FLASHING

S: WHEN THE ENERGY GAUGE IS FLASHING

KAYIN AMOH™

Height: 5' 9"
Weight: 141 lbs
Age: 23
Blood Type: AB
Nationality: English

REVENGE IS WHAT CHANGED THIS MAN

Believing that fighting brings about tragedy, Kayin put away his sword after the last Battle Arena Toshinden. However, to ensure Kayin's participation, the Himitsu Kessha kidnapped Kayin's foster daughter Naru. After much personal struggle, Kayin decided that there are fights that result in happiness, and he went to the last battle to win back his daughter. He no longer holds any doubts, as he returns to this Battle Arena Toshinden ready to fight.

SOFIA™

Height: 5' 7"
Weight: 110 lbs
Age: 25
Blood Type: A
Nationality: Russian

SHE FELT THE SORROW OF REMBERING HER PAST.

In the last battle, Sofia learned that her memory had been tampered with. She had been told of the life she once had, but nothing could equal a true memory. Because of this she was full of sorrow. Since then, Sofia learned that another fighter is facing the same sorrow. In search of that fighter, she comes to the Battle Arena Toshinden.

SPECIAL MOVES	COMMAND	SINGLE STRIKE SPECIAL MOVES
Thunder Ring	↓ ↙ ← + □ **or** △ also possible in mid-air	R1 Hard Attack
Aurora Revolution	→ ↘ ↓ ↙ ← + □ **or** △ also possible in mid-air	R2 Hard Attack
Jewelry Shower	← ↙ ↓ ↘ → + × **or** ○	R1+R2 Hard Attack
Rattlesnake	↓ ↘ → + □ **or** △ simultaneously	
Fascination 1	× + ○ + △ + □ simultaneously	R1+R2 simultaneously
Call Me Queen 2	→ ← → ← + △	R1+R2 simultaneously

U: WHEN THE OVERDRIVE GAUGE IS FLASHING

S: WHEN THE ENERGY GAUGE IS FLASHING

SPECIAL MOVES	COMMAND	SINGLE STRIKE SPECIAL MOVES
Fire Strike	↓ ↘ → + □ or △	R1 Hard Attack
Power Thrust	→ ↓ ↘ + × or ○	R2 Hard Attack
Spinning Charge	→ ↓ ↘ + □ or △	R1+R2 Hard Attack
Batter Up	→ ↘ ↓ ↙ ← + □ or △	
Brutal Stomper	↓ ↙ ← + × or ○ simultaneously	
Hyper Batter Up 1	× + ○ + △ + □ simultaneously	R1+R2 simultaneously
Mega Fire Strike 2	← ↙ ↓ ↘ → ↘ ↓ ↘ ↓ ↙ ← + △	R1+R2 simultaneously

U: WHEN THE OVERDRIVE GAUGE IS FLASHING

S: WHEN THE ENERGY GAUGE IS FLASHING

RUNGO

RUNGO IRON™

Height: 6' 4"
Weight: 204 lbs
Age: 31
Blood Type: A
Nationality: American

HE LISTENED INTENTLY TO A MAN WHO INSPIRED HIM WITH ZEALOUS WORDS.

Since the last Battle Arena Toshinden, Rungo safely rescued his wife and child from the hands of the Himitsu Kessha and learned that Gaia had organized the last battle without their permission. Realizing that Gaia is not the enemy after all, Rungo could not ignore his warning that something evil was about to happen at this battle. He joins Gaia ready for combat.

FO FAI™

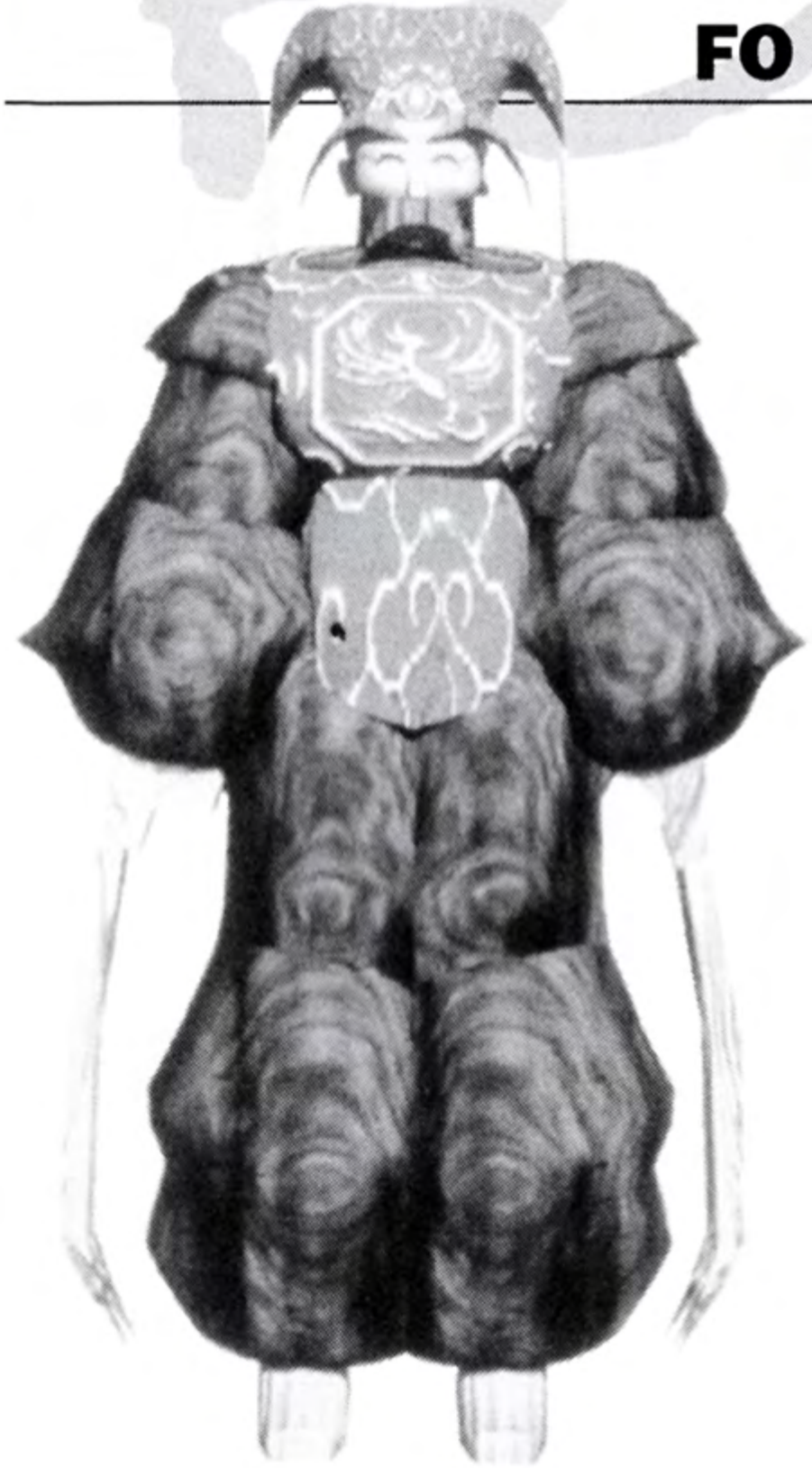

Height: 5'
Weight: 106 lbs
Age: 107
Blood Type: AB
Nationality: Chinese

THE LINES RUN DEEP ON THE FACE OF THE ASSASSIN.

Those who knew him well could feel the power just by looking at his twisted smile. The glow in Fo's smile shows the number of people he has killed. Fo has set forth towards the Battle Arena Toshinden once again in pursuit of his finest smile.

SPECIAL MOVES	COMMAND	SINGLE STRIKE SPECIAL MOVES
Mystic Sphere	→ ↘ ↓ ↙ ← + □ or △	R1 Hard Attack
Sphere Burst	→ ↘ ↓ ↙ ← + × or ○ in mid-air	R1 Hard Attack
Falling Sphere	← ↙ ↓ ↘ + □ or △	R2 Hard Attack
Rising Sphere	↓ ↙ ← + □ or △	R1+R2 Hard Attack
Pagoda Kick	↓ ↙ ← + × or ○	
Claw Attack	← → + △	
Sphere Throw 1	× + ○ + △ + □ simultaneously	R1+R2 simultaneously
Mystic Sphere Burst 2	→ ← ↙ ↓ ↘ → ← + △	R1+R2 simultaneously

U: WHEN THE OVERDRIVE GAUGE IS FLASHING

S: WHEN THE ENERGY GAUGE IS FLASHING

SPECIAL MOVES	COMMAND	SINGLE STRIKE SPECIAL MOVES
Shippu Tsuki (upper)	↓ ↘ → + □ or △	R1 Hard Attack
Goriki Raijin	↓ ↓ ↘ + □ or △ in mid-air	R2 Hard Attack
Goriki Tenbu	→ ↓ ↘ + □ or △	R1+R2 Hard Attack
Goriki Fujin	← ↙ ↓ ↘ → + □ or △	
Shippu Tsuki (lower)	↓ ↙ ← + □ or △ simultaneously	
Shippu Tentsuki	← ↓ ↙ + □ or △ simultaneously	
Choriki Mondohou 1	× + ○ + △ + □ simultaneously	R1+R2 simultaneously
Choriki Daibutsumetsu 2	↓ ↘ → ↓ ↘ → ← + △	R1+R2 simultaneously

U: WHEN THE OVERDRIVE GAUGE IS FLASHING

S: WHEN THE ENERGY GAUGE IS FLASHING

MONDO™

Height: 5' 9"
Weight: 146 lbs
Age: 43
Blood Type: AB
Nationality: Japanese

WITHOUT CHANGING HIS COUNTENANCE, "EMOTIONS ARE WHAT DETERMINE VICTORIES AND DEFEATS," HE SAID.

With secret orders, Mondo returned with information from the Himitsu Kessha. Just as his client (another organization) was about to attack the Himitsu Kessha, Mondo received an invitation to the Battle Arena Toshinden. As a way to retaliate, the organization tried to hold Mondo back telling him to discard the invitation. Mondo ignored the restraint and headed for the tournament without consent of his client. The shadows of his history are those of a fighter, not of a secret warrior.

DUKE B. RAMBERT™

Height: 6' 2"
Weight: 165 lbs
Age: 30
Blood Type: A
Nationality: French

NO MATTER HOW GREAT A SWORDSMAN DUKE MAY BE, HE STILL CANNOT CUT HIMSELF FROM HIS PAST.

After defeating his foe at the last Battle Arena Toshinden, Duke returned to his castle to train as a knight. Recently he received another invitation. His face froze as he looked at the name of the sender: Uranus, from the Himitsu Kessha. Unable to believe it, he clasped his precious sword, the Dernier Vancour, and set off to battle again.

SPECIAL MOVES	COMMAND	SINGLE STRIKE SPECIAL MOVES
Southern Cross	← → ↘ ↓ + □ or △	R1 Hard Attack
Cyclone	↓ ↘ → + □ or △	R2 Hard Attack
Head Crush	→ ↘ → + □ or △ in mid-air	R2 Hard Attack
Double Lunge	→ ↓ ↘ + □ or △	R1+R2 Hard Attack
Charge and Strike	↓ ↘ → + × or ○	
Grand Cross 1	× + ○ + △ + □ simultaneously	R1+R2 simultaneously
La Fin 2	↙ ↓ ↘ → ← + △	R1+R2 simultaneously

U: WHEN THE OVERDRIVE GAUGE IS FLASHING
S: WHEN THE ENERGY GAUGE IS FLASHING

SPECIAL MOVES	COMMAND	SINGLE STRIKE SPECIAL MOVES
Twinkle Twirl	↓ ↙ ← + □ or △	R1 Hard Attack
Arc Slash	↓ ↙ ← + □ or △ in mid-air	R1 Hard Attack
Flaming Crescent	→ ↓ ↘ + □ or △	R2 Hard Attack
Tornado	↓ ↙ ← + × or ○	R1+R2 Hard Attack
Air Dance	↓ ↙ ← + × or ○ in mid-air	R1+R2 Hard Attack
Angel Kiss 1	× + ○ + △ + □ simultaneously	R1+R2 simultaneously
Sweet Kiss 2	→ ← → ← + △	R1+R2 simultaneously

U: WHEN THE OVERDRIVE GAUGE IS FLASHING

S: WHEN THE ENERGY GAUGE IS FLASHING

ELLIS™

Height: 5' 2"
Weight: 101 lbs
Age: 17
Blood Type: O
Nationality: Turkish

NOW THAT SHE HAS DEFEATED HER FATHER, SHE SET FORTH ON ANOTHER BATTLE.

Ellis had learned that Gaia, the man in armor, was her real father. For some reason, she felt neither fondness nor hatred towards him. She decided to go back to the troupe of traveling minstrels who had raised her. A year passed and she received another invitation. With that, she was informed that her father was wanted by the Himitsu Kessha as a traitor. Still having no special feelings towards her father, yet she decided to go in the hope of saving him.

GAIA™

Height: 7'
Weight: 201 lbs
Age: 40+
Blood Type: O
Nationality: Japanese

HE TOOK OFF HIS ARMOR SO HE COULD CONCENTRATE ON TRAINING HIS PHYSICAL BODY.

As the Himitsu Kessha found out the truth behind the last Battle Arena Toshinden, Gaia was branded as a traitor and was marked for death. During his flee, he received an invitation. The sender was Uranus, his former colleague and long time enemy. "No matter where I hide, he knows where I am," he thought. Gaia took off his heavy armor as he headed towards the battle.

SPECIAL MOVES	COMMAND	SINGLE STRIKE SPECIAL MOVES
Flame Breath	← ↙ ↓ ↘ → + □ or △	R1 Hard Attack
Energy Slash	↓ ↙ ← + □ or △	R2 Hard Attack
Charging Thrust	→ ↓ ↘ + □ or △	R1+R2 Hard Attack
Illusion Attack	↓ ↙ ← + × or ○	
Moonlight	← → + △	
Dark Punisher 1	× + ○ + △ + □ simultaneously	R1+R2 simultaneously
Blazing Blow 2	→ ↘ ↓ ↙ ← ↙ ↓ ↘ → + △	R1+R2 simultaneously

U: WHEN THE OVERDRIVE GAUGE IS FLASHING

S: WHEN THE ENERGY GAUGE IS FLASHING

SPECIAL MOVES	COMMAND	SINGLE STRIKE SPECIAL MOVES
Cardiac Arrest	← ↙ ↓ ↘ → + □ or △	R1 Hard Attack
Flip Kick	→ ↓ ↘ + × or ○	R2 Hard Attack
Chopper Strike	→ ↓ ↘ + □ or △	R1+R2 Hard Attack
Jackpot	↓ ↙ ← + × or ○ also possible in mid-air	
Head Stomp	← ↓ ↙ + □ or △	
Double Flip Kick 1	× + ○ + △ + □ simultaneously	R1+R2 simultaneously
Badge Barrage 2	→ ← → ← + △	R1+R2 simultaneously

U: WHEN THE OVERDRIVE GAUGE IS FLASHING

S: WHEN THE ENERGY GAUGE IS FLASHING

TRACY™

Height: 5' 4"
Weight: 106 lbs
Age: 21
Blood Type: B
Nationality: American

WITH TONFA IN HAND AND A GRAVE EXPRESSION ON HER FACE, THIS FEMALE COP SHOUTED, "FREEZE!"

She was a righteous female cop who always let her opponent strike the first blow so that she could use self-defense as an excuse to exert maximum lethal force. She received an invitation to the Battle Arena Toshinden and thought, "I'm glad it wasn't a request for a written apology." Relieved, she picked up her Tonfa with a new gleam in her eyes.

CHAOS™

Height: 7' 7"
Weight: 154 lbs
Age: 35
Blood Type: B
Nationality: Sri Lankan

HE IS A MAN WHO CAN BE EXPRESSED IN ONE WORD; SINSTER.

He is one of the top executives of the Himitsu Kessha. People feared that there was no one who could equal his prominent combat skills or his vengeance. But then a change took place in him. He stopped talking despite having been a man of many words. Rumors spread that "perhaps he had lost his memory." That is when his entry in the Battle Arena Toshinden was decided. What was the promoter's real intention? Chaos did not say a word.

SPECIAL MOVES	COMMAND	SINGLE STRIKE SPECIAL MOVES
Chaos Breath	↓ ↘ → + □ or △	R1 Hard Attack
Death From Above	↓ ↘ → + □ or △ in mid-air	R1 Hard Attack
Grim Reaper	→ ↘ ↓ ↙ ← + □ or △	R2 Hard Attack
Scythe Drill	← ↙ ↓ ↘ → + × or ○	R1+R2 Hard Attack
Spider Crawl	→ ↓ ↘ + × or ○	
Death Bringer 1	× + ○ + △ + □ simultaneously	R1+R2 simultaneously
Corkscrew 2	← ↙ ↓ ↘ → ↘ ↓ ↙ ← + △	R1+R2 simultaneously

U: WHEN THE OVERDRIVE GAUGE IS FLASHING

S: WHEN THE ENERGY GAUGE IS FLASHING

CREDITS

EXECUTIVE PRODUCER
David Luehmann

PRODUCER
David Hoffman

ASSOCIATE PRODUCER
Carlos Rodriguez

QA MANAGER
Rich Frey

LEAD TESTER
Dave Arranaga

TESTERS
Andy Brown
Art Datangel
Lee Jones
Leland Mah
James Martinez
Dave Ontiveros
Jose Zatarain

MARKETING
Kelly Frey
Kathy Sison

SALES
David Localio

ASSISTANT
Sue Lucchino

SPECIAL THANKS
Takara
Tamsoft
Richard Sallis
Thomas Chan
Scott Herrington
United Airlines
Tina Kowalewski
Playmates Toys
Moore & Price Design

NOTES

NOTES

USAGE PRECAUTIONS

- This disk contains software made exclusively for PlayStation. Never use this disk with other machines as it may cause equipment damage and other damages or it may have adverse effects on the human body such as the ear.
- Read the section "For Your Safety" in both the Guide and the Instruction Manual that came with your PlayStation machine and make sure that this game is used correctly.
- When setting this disk onto PlayStation, please make sure that the side with the label (the side with the title printing etc.) is facing up. Furthermore, push the middle section lightly to stabilize the disk.
- After play has been completed, press the Open button on the PlayStation and confirm that the disk has stopped rotating completely before removing the disk. Never touch the disk while it is rotating as it can cause injury or cause damage to the disk or PlayStation.
- Both sides of the disk should be handled with care to keep it clean and free of fingerprints and to avoid damage. Also, do not put any type of adhesive labels on the disk or write or draw anything on it using pencils, pens or anything else.
- If the disk becomes dirty, wipe it with a light touch from the inner side of the disk in an outward radial stroke, using a soft cloth such as a cloth that is used for wiping glasses. Do not use record cleaners or solvents, etc.
- Never use a disk that is cracked, deformed or has been repaired with any type of adhesive as it can cause malfunctions.
- Do not store the disk in a warm place such as a place where it can be exposed to direct sunlight or near a heating equipment. Furthermore, avoid storing in places with high humidity.
- Never place or drop any heavy material on the disk or its case as they can break and cause injuries.
- After completing play, return the disk to its case and store out of the reach of small children.
- Never connect your PlayStation to a projection television since light from the residual image may burn into the screen.
- Some software may require memory cards. Please check the Guide.

HEALTH PRECAUTIONS

- To protect your health, please take a 15 minute break after each hour of play.
- Avoid play when fatigued or when sleepy.
- When playing, make sure there is enough light in the room and maintain as much distance as possible from the television screen.

PLAYMATES INTERACTIVE ENTERTAINMENT INC.
LIMITED WARRANTY

Playmates Interactive Entertainment Inc., warrants to the original consumer purchaser of this Product that it will perform substantially as described in the user documentation for a period of ninety (90) days from the date of purchase.

Playmates Interactive Entertainment Inc., agrees for a period of ninety (90) days, at its option, to either repair or replace this Product free of charge in the event of a defect of material or workmanship, provided that the Product is returned to the address shown below, postage paid, accompanied by a dated proof of purchase. The repair or replacement of this Product discharges Playmates Interactive Entertainment Inc.'s entire liability and is your exclusive remedy. This warranty shall not be applicable and shall be void if the defect in the Product has arisen through abuse, unreasonable use, mistreatment or neglect.

EXCEPT AS STATED ABOVE, PLAYMATES INTERACTIVE ENTERTAINMENT INC., MAKES NO OTHER WARRANTY, EITHER EXPRESS OR IMPLIED, REGARDING THE PRODUCT AND THE ACCOMPANYING DOCUMENTATION. ANY WARRANTIES APPLICABLE TO THIS PRODUCT, INCLUDING WARRANTIES OF MERCHANTABILITY AND OF FITNESS FOR A PARTICULAR PURPOSE ARE LIMITED TO THE NINETY (90) DAY PERIOD DESCRIBED ABOVE. IN NO EVENT WILL PLAYMATES INTERACTIVE ENTERTAINMENT INC. BE LIABLE FOR DIRECT, INDIRECT, SPECIAL, INCIDENTAL OR CONSEQUENTIAL DAMAGES RESULTING FROM POSSESSION, USE OR MALFUNCTION OF THE PRODUCT, EVEN IF PLAYMATES INTERACTIVE ENTERTAINMENT INC., HAS BEEN ADVISED OF THE POSSIBILITY OF SUCH DAMAGES. PLAYMATES INTERACTIVE ENTERTAINMENT INC.'S SOLE LIABILITY SHALL BE LIMITED TO THE PURCHASE PRICE OF THIS PRODUCT.

SOME STATES DO NOT ALLOW LIMITATIONS AS TO HOW LONG AN IMPLIED WARRANTY LASTS SO THE ABOVE LIMITATION MAY NOT APPLY TO YOU. SIMILARLY, SOME STATES DO NOT ALLOW THE EXCLUSION OR LIMITATION OF INCIDENTAL OR CONSEQUENTIAL DAMAGES, SO THE ABOVE LIMITATION OR EXCLUSION MAY NOT APPLY TO YOU. THIS WARRANTY GIVES YOU SPECIFIC LEGAL RIGHTS, AND YOU MAY ALSO HAVE OTHER RIGHTS WHICH VARY FROM STATE TO STATE.

Distributed exclusively by

Item No.6583

Playmates Interactive Entertainment Inc.
16200 S. Trojan Way
La Mirada, CA 90638
Customer Service (310) 407-1490

Playmates Interactive Entertainment
16200 S. Trojan Way La Mirada, CA 90638 (310) 407-1490

Battle Arena Toshinden 2 and all character names and distinctive likenesses thereof are trademarks of Takara Co., Ltd. ©Takara Co., Ltd. 1996.
Programmed © Tamsoft 1996. All rights reserved.
PIE™ is a trademark of Playmates Interactive Entertainment.

Licensed by Sony Computer Entertainment America for use with the PlayStation game console. PlayStation and the PlayStation logos are trademarks of Sony Computer Entertainment, Inc. The ratings icon is a registered trademark of the Interactive Digital Software Association.
Manufactured and printed in U.S.A.
THIS SOFTWARE IS COMPATIBLE WITH PLAYSTATION GAME CONSOLES WITH THE NTSC U/C DESIGNATION.

U.S. AND FOREIGN PATENTS PENDING