PlayStation®

NTSC U/C

PlayStation®

ARMORINES

PROJECT S.W.A.R.M.™

TEEN

T

CONTENT RATED BY ESRB

SLUS-01022
#21188

Acclaim®

WARNING: READ BEFORE USING YOUR PLAYSTATION® GAME CONSOLE.

A very small percentage of individuals may experience epileptic seizures when exposed to certain light patterns or flashing lights. Exposure to certain patterns or backgrounds on a television screen or while playing video games, including games played on the PlayStation game console, may induce an epileptic seizure in these individuals. Certain conditions may induce previously undetected epileptic symptoms even in persons who have no history of prior seizures or epilepsy. If you, or anyone in your family, has an epileptic condition, consult your physician prior to playing. If you experience any of the following symptoms while playing a video game – dizziness, altered vision, eye or muscle twitches, loss of awareness, disorientation, any involuntary movement, or convulsions – IMMEDIATELY discontinue use and consult your physician before resuming play.

WARNING TO OWNERS OF PROJECTION TELEVISIONS:

Do not connect your PlayStation game console to a projection TV without first consulting the user manual for your projection TV, unless it is of the LCD type. Otherwise, it may permanently damage your TV screen.

USE OF UNOFFICIAL PRODUCT:

The use of unofficial products and peripherials may damage your PlayStation game console and invalidate your console warranty.

HANDLING YOUR PLAYSTATION DISC:

- This compact disc is intended for use only with the PlayStation game console.
- Do not bend it, crush it or submerge it in liquids
- Do not leave it in direct sunlight or near a radiator or other source of heat.
- Be sure to take an occasional rest break during extended play.
- Keep this compact disc clean. Always hold the disc by the edges and keep it in its protective case when not in use. Clean the disc with a lint-free, soft, dry cloth, wiping in straight lines from center to outer edge. Never use solvents or abrasive cleaners.

TABLE OF CONTENTS

Loading 3
Introduction 5
Armorines Menus 6
Playing the Game 8
Default Controls 8
Alternate Controls 9
Basic Game Objective 13
Pick-Ups 14
Weapons 15
Special Weapons 17
Ammunition 18
Know Your Enemy 18
Hints & Tips 19

LOADING

1. Set up your PlayStation® game console according to the instructions in its instruction manual.
2. Make sure the power is **OFF** before inserting or removing a compact disc. Insert the **ARMORINES: PROJECT S.W.A.R.M.**™ disc and close the disc cover. If you wish to save your game, insert a Memory Card (sold separately) into Memory Card Slot 1.
3. Insert game controllers and turn on the PlayStation® game console.
   Note: ARMORINES: PROJECT S.W.A.R.M.™ is for up to 2 players.

Follow on-screen instructions to start a game.

Console

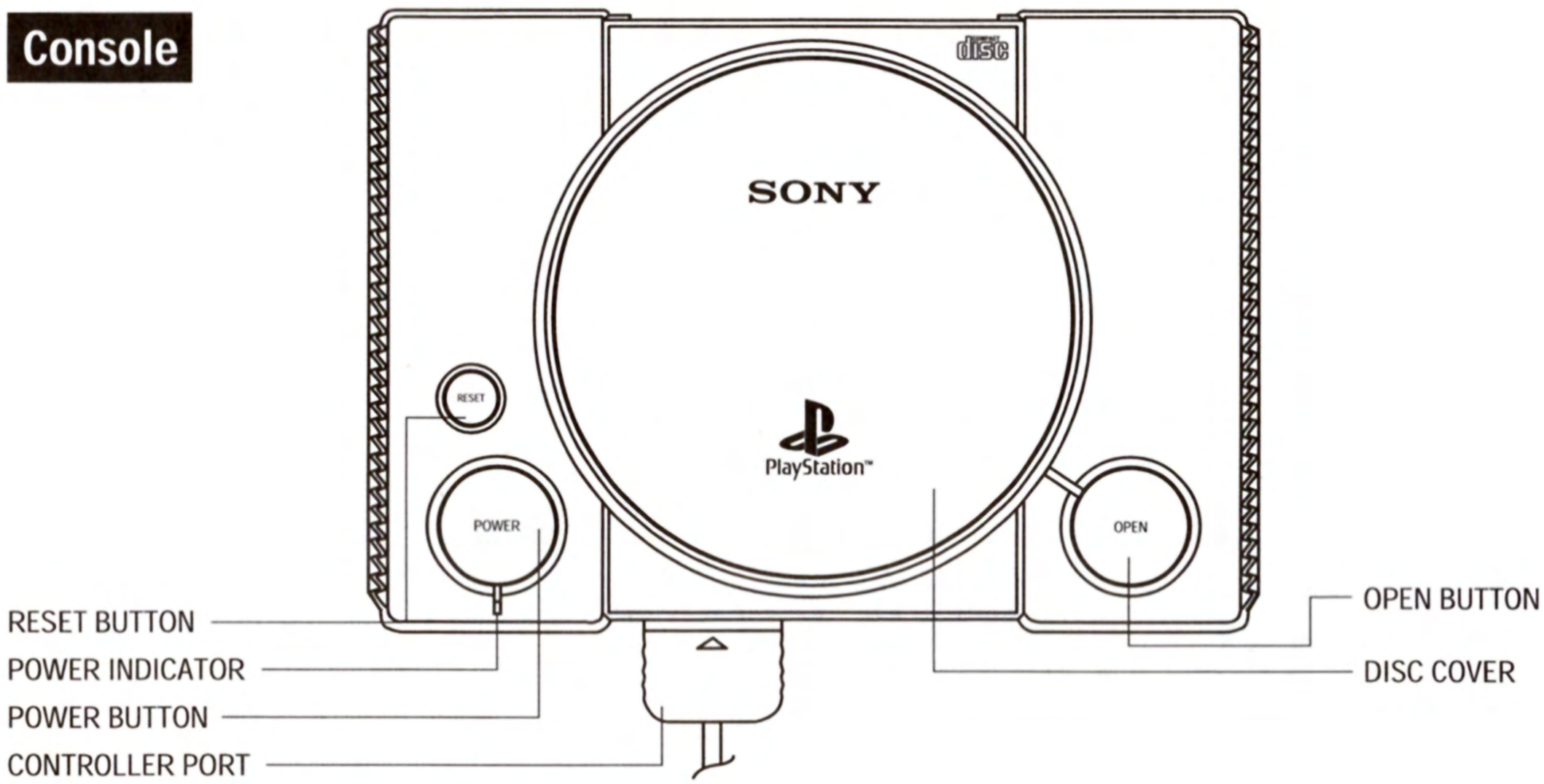

DUALSHOCK™ analog controller

L2 BUTTON
L1 BUTTON
R2 BUTTON
R1 BUTTON
DIRECTIONAL BUTTONS
△ BUTTON
○ BUTTON
× BUTTON
□ BUTTON
LEFT ANALOG STICK
SELECT BUTTON
ANALOG BUTTON
START BUTTON
RIGHT ANALOG STICK

Front View

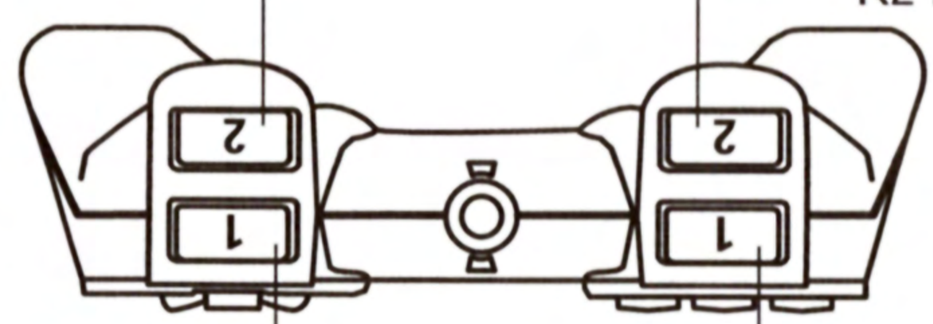

INTRODUCTION:

For centuries the human race has gazed in wonder at the brilliant clusters of white light that dominate the night skies. One unanswered question has constantly plagued our ever-inquisitive minds... Are we alone in the universe?

If not, would our interstellar neighbors be wise, peaceful and benevolent, or would they be savage, hostile and predatory? Would they bring wisdom and hope to our world or would they bring destruction and death? These profound questions remained unanswered as the human race entered the third millennium of history.

Our past has been tainted with war. Many hoped that extraterrestrial life would bring advanced philosophies and technologies to our culture, helping humanity embrace the next thousand years with optimism and a new era of multi-cultural cooperation.

Our planet is the only home we have.

When the extraterrestrial life came, it brought bloody chaos, the ransacking and pillaging of our beautiful world. The Bugs did not seek coexistence -- they sought extinction. Nobody understood the motives behind their unholy agenda.

They swiftly overwhelmed all military opposition. Defenses were infiltrated and used against us. Poisonous clouds issued from their hives. Those who could not flee, perished or were trapped in whatever shelter they could find.

We had to match their awesome power if we were to have a chance of defeating them.

The **ARMORINES** were the miracle we needed. A highly advanced, highly classified, virtually indestructible fighting force, equipped to survive the terrifying might of a nuclear conflict. They were created to cheat death and stare it in the face.

They stand between us and the darkness.

They are our last hope for survival.

ARMORINES MENUS

Use the **DIRECTIONAL BUTTONS** to highlight an item. Press the ⊗ **BUTTON** to confirm a choice/go to the next screen. Press the △ **BUTTON** to return to the previous screen (Go Back).

MAIN MENU

At the Main Menu, you have these choices:

SINGLE

Start a new single player game.

OPTIONS

Before you start a game, it is wise to set your options. To set options, highlight the desired option with **UP** and **DOWN** on the **DIRECTIONAL BUTTONS,** then toggle between settings with **LEFT** and **RIGHT** on the **DIRECTIONAL BUTTONS.** Press the ⊗ **BUTTON** to choose settings.

Gameplay

- **Difficulty**
  Select the Normal or Hard skill setting.

Controller 1/Controller 2

As Player 1 or Player 2, you can select the following options for your controller here:

- **Look Springs**
  When **ON,** your view will **"spring"** back to a centered position when you release the look control and move your character. If **OFF,** the view will remain where it is after the control is released.
- **Auto Aim**
  Set to **ON** for automatic targeting help.
- **Look**
  You can retain the **"Normal"** look configuration or select **"Invert"** to switch the location of **"Look Up"** and **"Look Down"** on your controller.
- **Vibration**
  If you have the **DUALSHOCK™** analog controller, set the vibration **ON** for some bug blasting you can feel!

- **Configure**
  You can select any of the four available controller configurations (for details see Default and Alternate Controls on page 8).

Display

Use the **DIRECTIONAL BUTTONS** to center the display area on your television.

Sound

- **Sound Effects Volume**
  Use slider to adjust/turn off the sound effects volume.
- **Speech Volume**
  Use slider to adjust/turn off the speech volume.
- **Music Volume**
  Use slider to adjust/turn off the music volume.
- **Stereo/Mono**
  Select your choice of sound output.

When through setting options, press the ▲ **BUTTON** to return to the Main Menu.

MEMORY CARD

You can manage the **MEMORY CARD** in **MEMORY CARD SLOT 1** or **MEMORY CARD SLOT 2** from this screen. Delete blocks or load a previously saved **ARMORINES** game.

COOPERATIVE

This is for 2 players, with Player 1 as Lewis and Player 2 as Lane. You will both follow the single player missions. Watch each other's backs and work as a team to make quick work of the Bugs!

MULTIPLAYER

Play against your fellow **ARMORINE** in a battle to the finish! Set up the following options and you're ready to kill or be killed!

- **Time Limit**
  Set the time limit for your battle from 5 to 30 minutes in 5 minute increments or select **"None"** to play as long as you like.

- **Frag Limit**
  Achieve the target number of kills to win! You can set it from 5 to 50 frags in 5 frag increments or set the limit to **"None"** to frag as much as you like.
- **Level**
  Select which level you want to battle on from Level 1 to 5.
- **Play**
  Let the battle begin!

After setting up your options, choose which **ARMORINE** you want to play as (Lewis or Lane) and your multiplayer war begins.

GALLERY

Peruse a plethora of **ARMORINES** concept art! Press the ⊗ **BUTTON** to proceed and the ■ **BUTTON** to see the previous picture. Press the △ **BUTTON** when you're done looking.

PLAYING THE GAME

ARMORINES features four different methods of controlling your character. This is achieved by four different sets of button variations. The options for each button remain the same.

DEFAULT CONTROLS

Option 1 is the default control method for **ARMORINES.**

OPTION 1

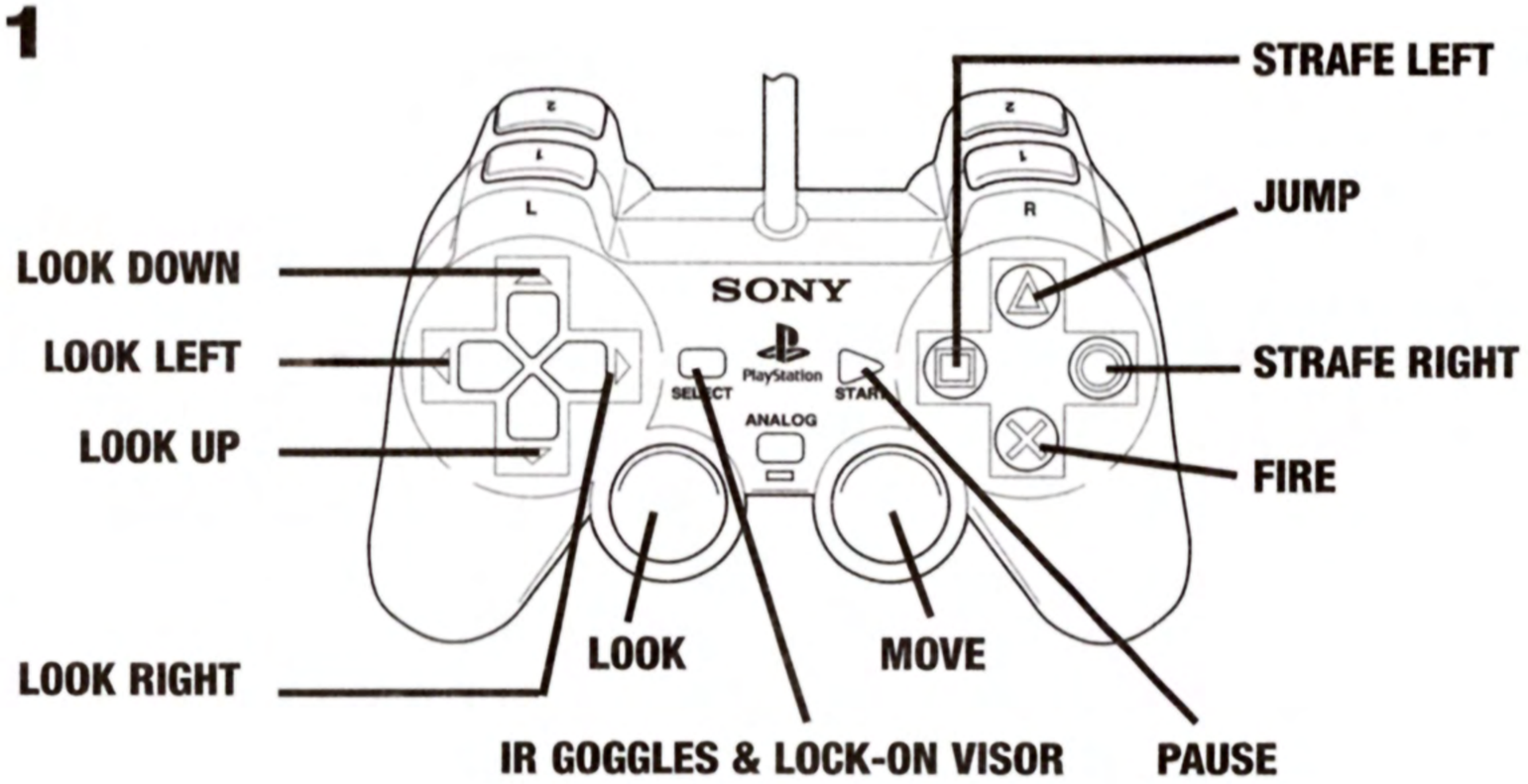

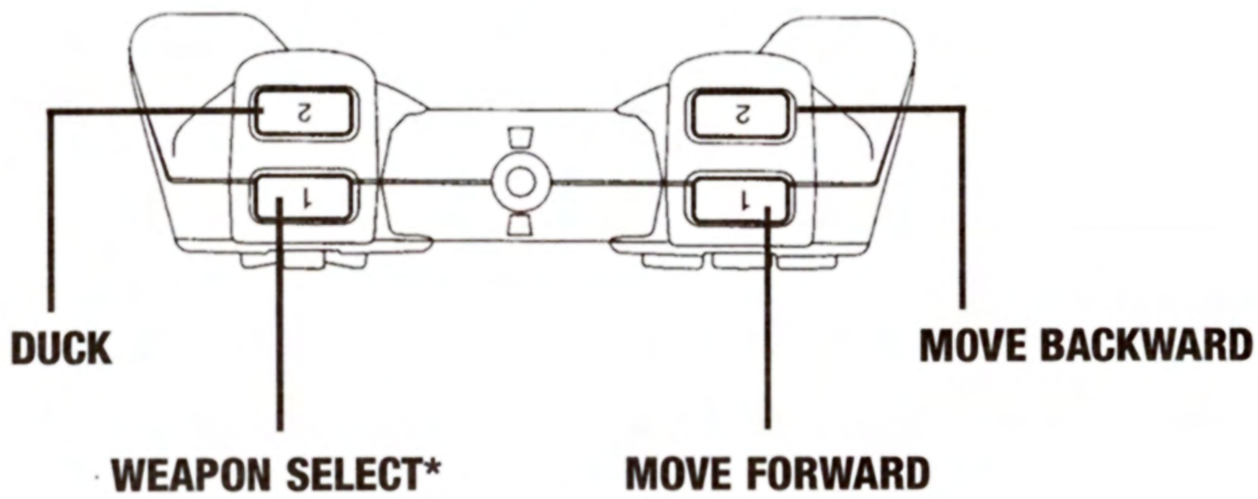

***See "Weapon Select" on page 12 for a detailed description of this function.**

ALTERNATE CONTROLS

Below is a listing of Options 2 through 4 which can be used as alternate methods of control for **ARMORINES.**

OPTION 2

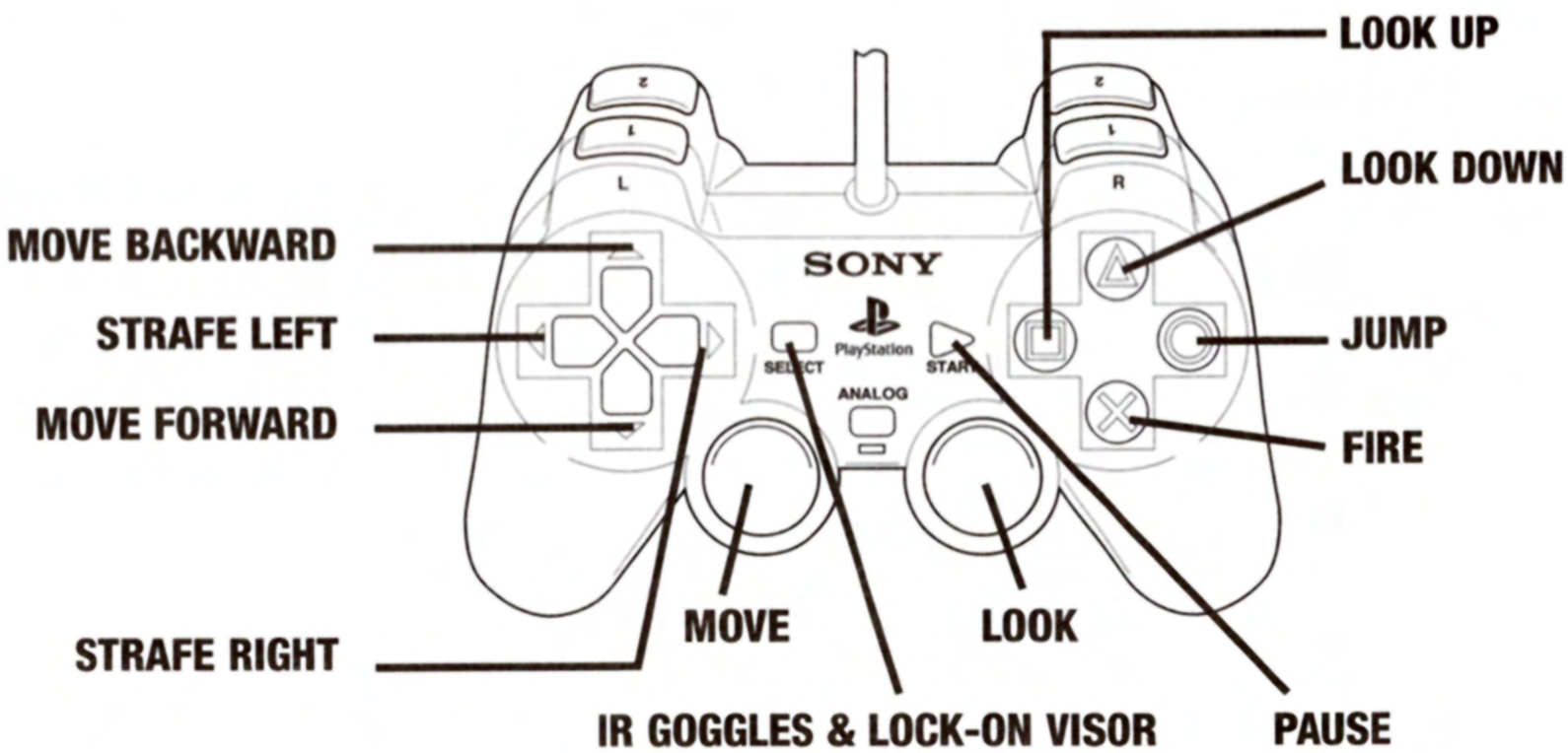

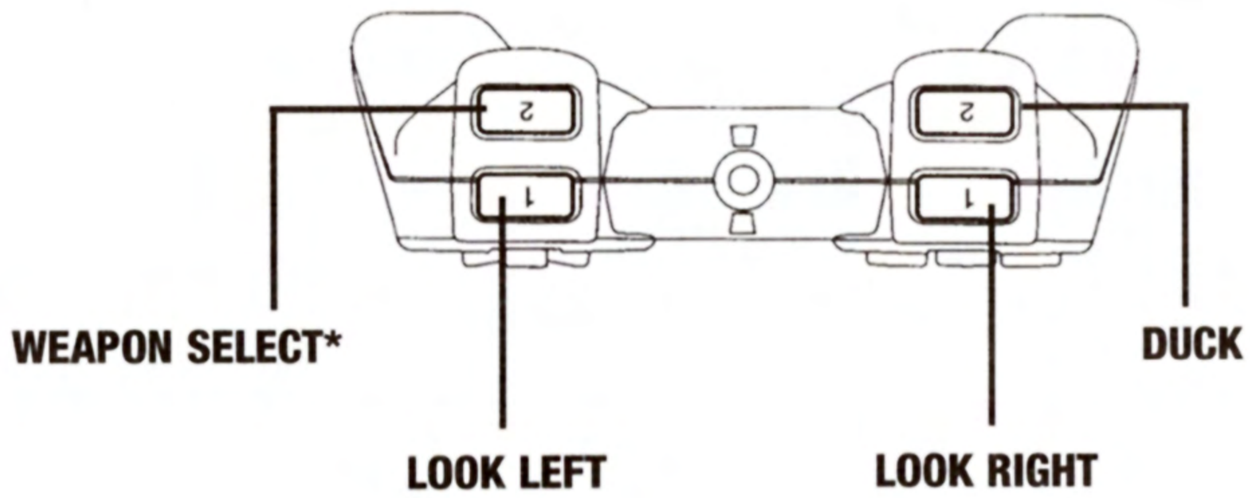
WEAPON SELECT*
DUCK
LOOK LEFT
LOOK RIGHT

OPTION 3

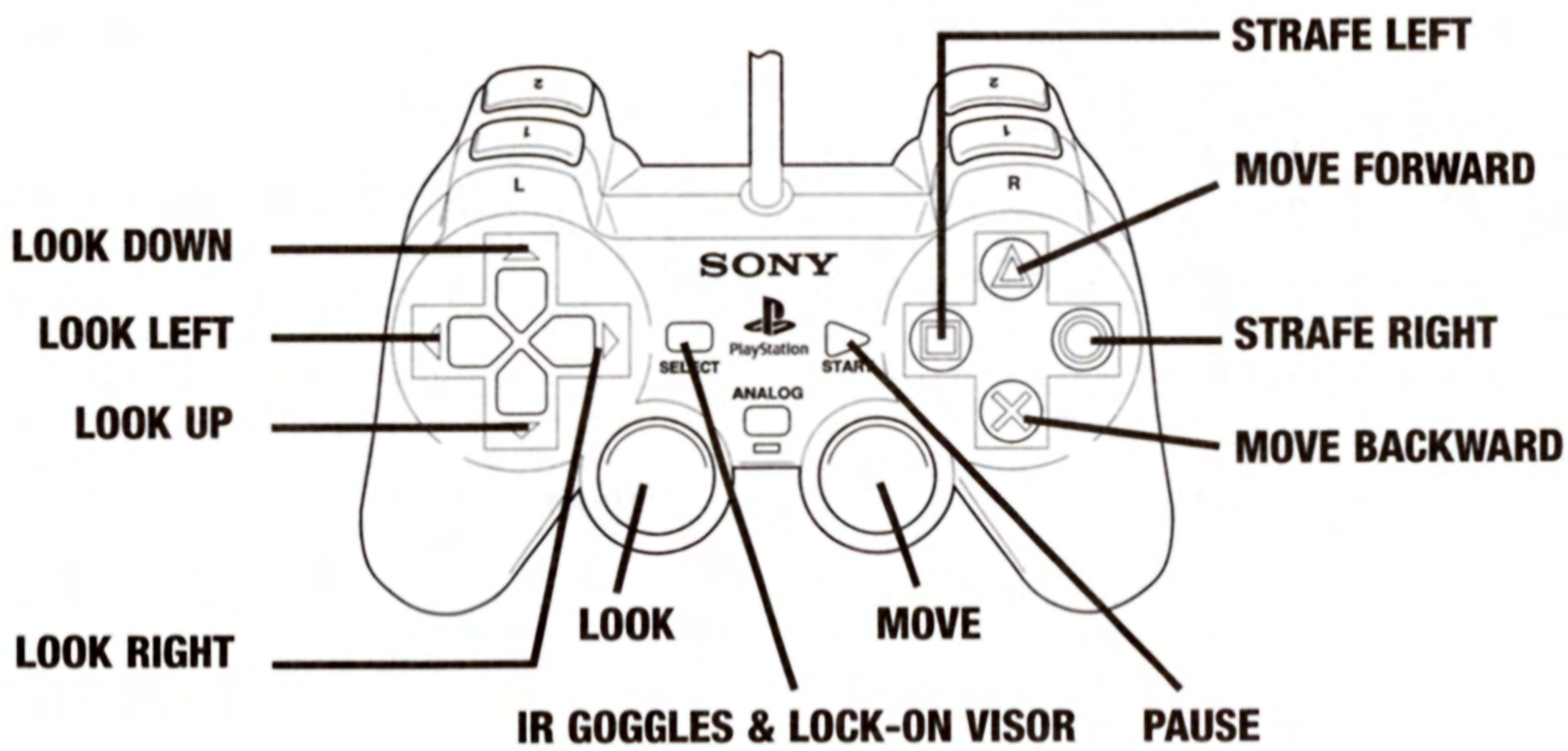
STRAFE LEFT
MOVE FORWARD
LOOK DOWN
LOOK LEFT
LOOK UP
STRAFE RIGHT
MOVE BACKWARD
LOOK RIGHT
LOOK
MOVE
IR GOGGLES & LOCK-ON VISOR
PAUSE

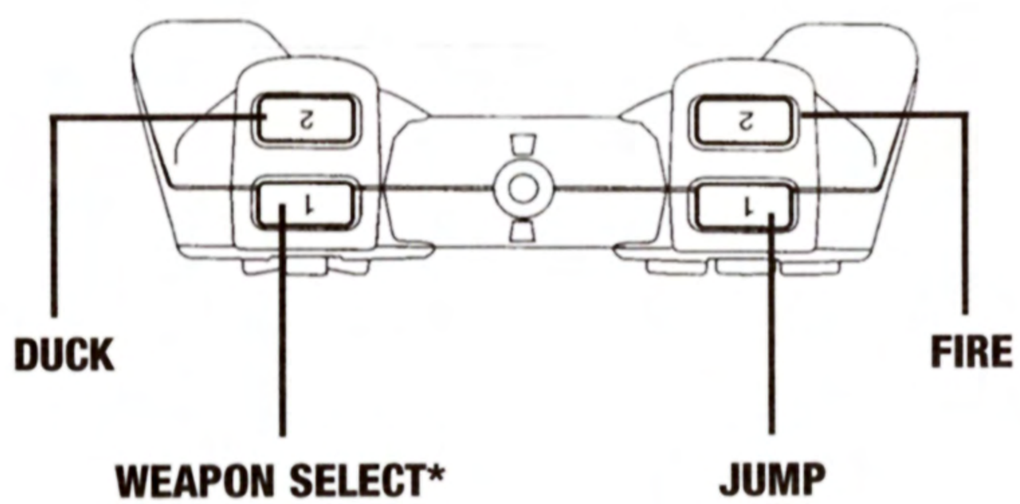
DUCK
FIRE
WEAPON SELECT*
JUMP

OPTION 4

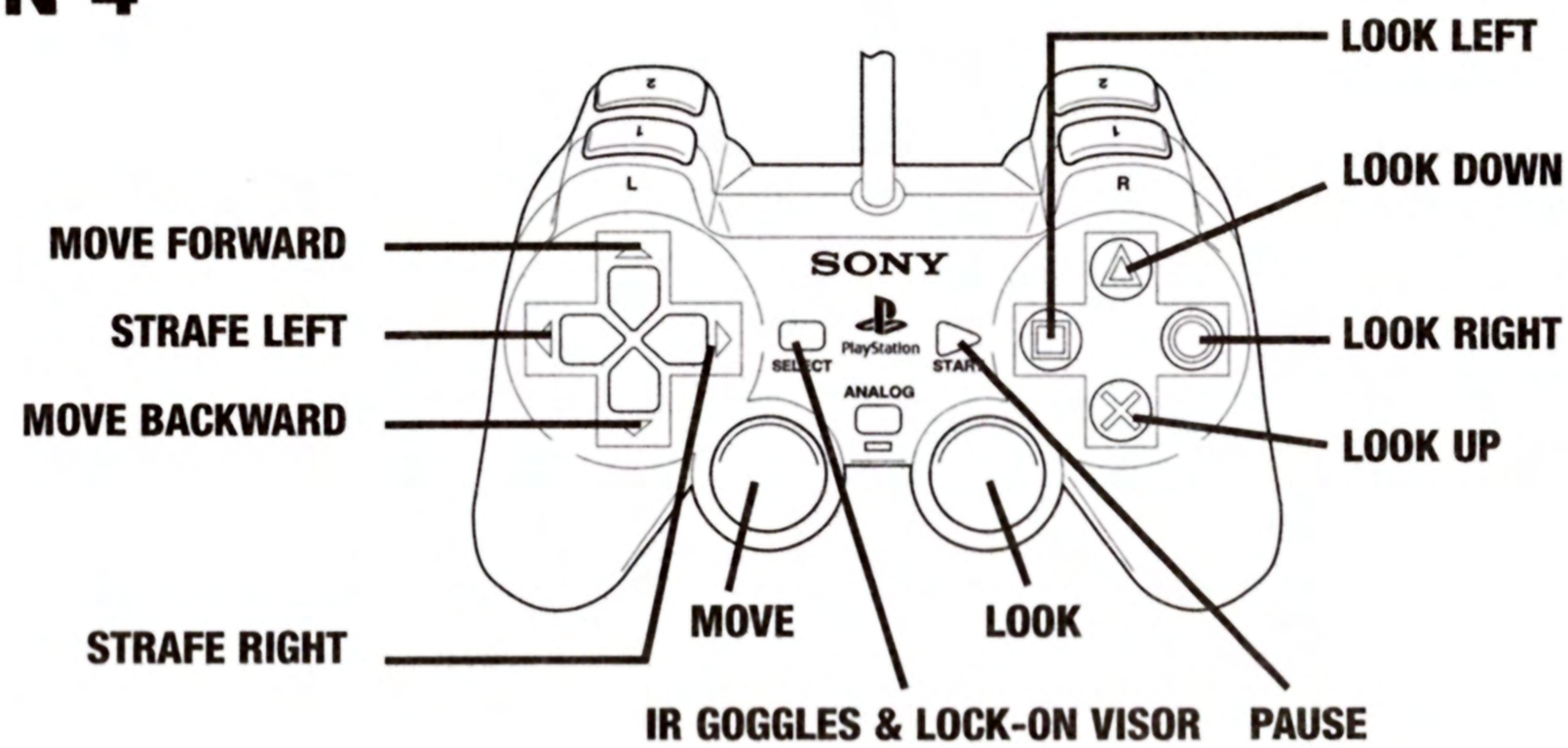

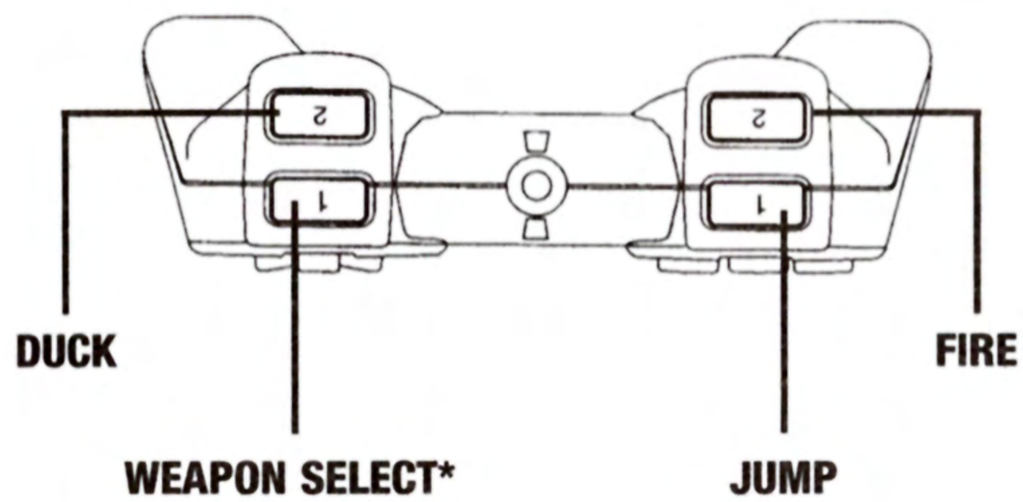

***See "Weapon Select" on page 12 for a detailed description of this function.**

MOVE

You can move forwards or backwards. The direction you are looking determines your forward direction.

STRAFE

The **STRAFE BUTTONS** enable the **ARMORINE** to move left and right while still facing forward.

LOOK

The **LOOK BUTTONS** enable the **ARMORINE** to look up, down, left and right. This also points your weapon in all directions – use it for bugs at your feet or up on ledges.

FIRE

The **FIRE BUTTON** is used to operate the weapons. It is necessary to hold the **FIRE BUTTON** for up to 3 seconds after the environment weapon has been selected in order to achieve a more powerful shot. Pick up the environmental weapon at least twice to deal more damage.

JUMP

The **JUMP BUTTON** enables the **ARMORINES** to jump onto and across things.

WEAPON SELECT

Weapons are selected by pressing **WEAPON SELECT BUTTON** plus:

LOOK UP - Selects Special Weapon
LOOK DOWN – Selects Thrown Weapon
LOOK LEFT – Changes to Primary Weapon
LOOK RIGHT – Changes to Secondary Weapon

Note: Holding down the WEAPON SELECT BUTTON and pressing the LOOK LEFT BUTTON twice will bring up the Melee Weapon.

DUCK

The **ARMORINES** can enter small spaces by crouching. This is achieved by pressing the **DUCK BUTTON.** Pressing **MOVE FORWARD** after ducking allows the **ARMORINE** to crawl slowly.

Note: You cannot strafe when crouched.

IR GOGGLES AND LOCK-ON VISORS

Pressing the **SELECT BUTTON** in any controller configuration will bring up the IR Goggles, then the Lock-On Visor, then return to normal view.

- **IR Goggles**
  Enables **ARMORINES** to see in dark areas. The IR Goggles must be found in the environment before they can be used.
- **Lock-On Visor**
  Targets enemies in the distance. The Lock-On Visor is available right from the beginning of your mission.
  Note: Your ARMORINE cannot move when the Lock-On Visor is active.

PAUSE

The **START BUTTON** puts the game on hold, allowing the player to view mission objectives or to quit.

BASIC GAME OBJECTIVE

A marauding alien life form that we call the Bugs has invaded four locations on Earth: a military base in Siberia, an ancient temple in the South American jungle, a volcanic island in the South Pacific and an area of mountains and desert in Egypt.

Military intelligence has been unable to determine their exact motives, but we must conclude that the occupation of these regions fulfills an essential role in their ghastly strategy.

You must engage the Bugs with lethal force at each location and gradually expel all Bug infestation from this planet. The battle will not be easy. They are the most vicious hostile force ever encountered. Along the way you will be presented with a series of tasks and objectives vital to the success of your mission. You will have the difficult task of liberating civilians from the Bugs' vile clutches. And you will have the still more difficult task of staying alive.

The world is with you. Confidence is high.

Game Screen

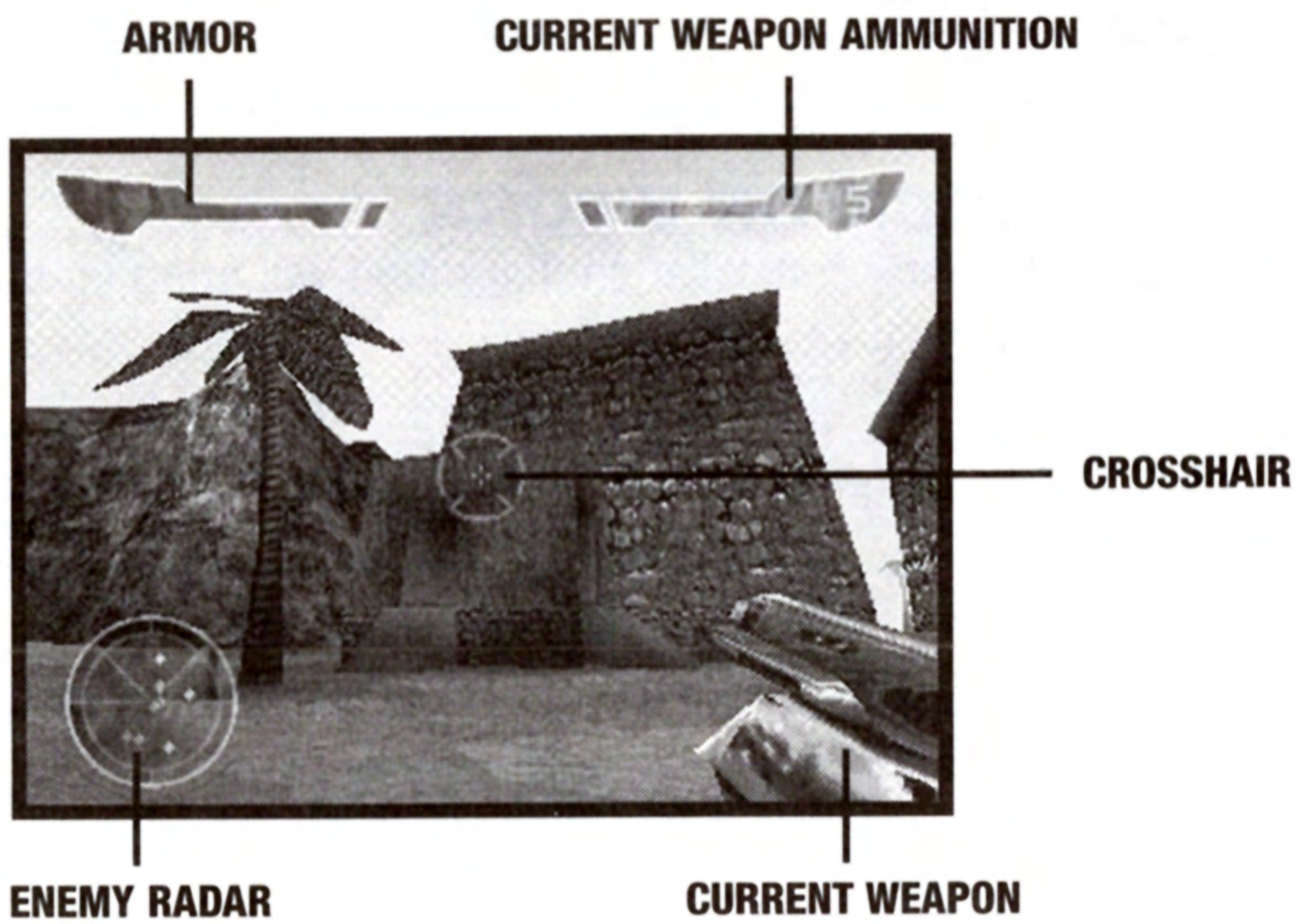

PICK-UPS

ARMOR

There are three types of armor with different values.

Helmet - 20 armor points

Boots and Gloves - 50 armor points

Vest - 100 armor points

VISORS/GOGGLES

IR Goggles enable you to see in the dark. Lock-On Visors pick out enemies in the distance and then lock-on to the target, guaranteeing a hit. Lock-On Visors are for long-range use only.

THUMPER

Our scientists have isolated a signal used by the Bugs, presumably for communication. The Thumper sends this signal reverberating through the ground and the air. Hopefully it will distract the Bugs if carefully placed, allowing you to pass undetected, or to ambush them.

SMART BOMB BEACONS

Place the smart bomb beacons in areas where you need precision missile strikes. You will be directed by your superiors when and where to use them.

ADRENALINE

A massive chemical boost is contained in this pick-up – it will allow you to fight harder for a brief period.

CAMOUFLAGE

When using the camouflage pick-up, the Player is hidden from other players **(THIS IS ONLY ACCESSIBLE IN MULTIPLAYER).**

MINES

Use these carefully! They send out a devastating explosion in a close radius to where they are dropped. They detonate shortly after they are dropped, rather than if a Bug stands on one. You will find them as pick-ups around the level.

WEAPONS

You begin the game with two or three basic weapons: 1 melee range, 1 energy and 1 explosive projectile. You keep these weapons throughout the game. Only the explosive weapon will run out of ammo, but it can be reloaded by collecting the appropriate ammo pick up.

In addition to the **ARMORINE** weapons, you will find an extra weapon in each environment. Some are air dropped in by the military to aid you, others are unique to the environment you are in and you will have to experiment with them. These "Special Weapons" are exclusive to the environment they are found in, and cannot be carried to the next environment.

LEWIS ENERGY WEAPON: SHOT BLASTER

This plasma blaster is the main weapon Lewis will use in his missions. Although it inflicts considerably less damage than the rocket launcher, it will never run out of ammunition.

LEWIS EXPLOSIVE PROJECTILE WEAPON

This powerful rocket launcher is equipped with a full supply of ammo at the beginning of the game. You'll need to find ammo pick-ups to replenish your supply as you progress through the game.

LANE MELEE WEAPON: ELECTRO-BOLT

This cattle prod style weapon will inflict more damage than the energy weapon if you have the nerve to get close to the Bugs.

LANE ENERGY WEAPON: LIGHTBRINGER

This rapid-fire energy rifle serves as Lane's main weapon as you progress through the game. As before, while it inflicts less damage than the other three **ARMORINES** weapons, it never runs out of ammo.

LANE EXPLOSIVE PROJECTILE WEAPON

This grenade launcher will be fully supplied with ammo at the beginning of the game. You will need to collect fresh supplies from pick-ups as the game progresses.

SPECIAL WEAPONS

There are 7 special weapons exclusive to each environment. You can power up the weapons as you progress throughout the environment. Hold down the **FIRE BUTTON** once you have powered the weapon up to release a more damaging blast.

Note: All environmental weapons must be picked up at least twice to ensure that it will deal the maximum damage.

SIBERIA

VOLCANIC LASER – A prototype battlefield weapon being developed in the base now overrun by Bugs. Can inflict great damage at a long range.

JUNGLE

CHEMICAL GUN – An experimental weapon dropped in by HQ. Part of your mission will be to locate this weapon.

ANACONDA – A weapon created to serve its master, the Anaconda is a cursed snake entwined on a sacred staff and is found in the ancient ruins of a long lost Aztec civilization. Squeezing the soft underbelly of the snake invokes a nervous reaction forcing gastric juices to be expelled at high pressure. Highly toxic bacteria held within the juices will digest any organism it touches!

VOLCANO

SONIC CUTTER – Dropped in by the military to aid you against the rock-like Bugs on the island, this fires a charge which releases a devastating pulse. Hopefully it will be enough to shatter the Bugs' defenses.

EGYPT

SHAFT OF THE PHARAOH – Discovered by the Bugs when they started tunneling beneath the Pyramids, they have used the energy from this ancient weapon to bolster their own attack capabilities. This artifact from our distant past may be the only thing that can save our future! Devastating when fully charged.

HIVE

BLADES – The Blades are for when you want to get close up and personal! A set of carbonated steel vibro-blades is the only weapon for the discerning marine. Tuned to above audible sound, these babies make ripping through exoskeletons effortless. Bring it on, and feel the steel!

UNKNOWN - Information on this weapon is currently classified.

AMMUNITION

Ammunition comes in several different forms. There are rocket packs for Lewis and grenade boxes for Lane. These will be airdropped over your mission zones by the military, and troopers may have left others on the ground. Additionally, each **"Special Weapon"** will have its own power up that not only reloads the weapon but may also increase its damage capability.

KNOW YOUR ENEMY

The Bug enemies you face throughout the game are divided into "families". There is one family of Bugs in each environment. Each family has a hierarchical structure and each member has an insatiable craving for death and bloody mayhem.

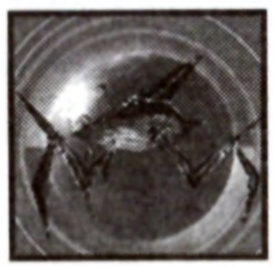

TERMITES and TICKS

These do not appear in every level as the Bugs need them only where great amounts of work have to be done. Although these are only lowly workers, they are still very dangerous!

SOLDIER

The soldiers are the main attack force of the hive. They specialize in close range combat. Don't let them anywhere near you!

GUARD

Guards are frighteningly resilient soldier bugs. They provide ruthless protection for the Queen and brain bugs. They will offer brutal opposition to anyone who tries to get past them.

BRAIN

The brains are the most intelligent of the Queen's servants. Brains are heavily armored and capable of defending themselves fiercely and effectively. Some may have the ability to "summon" other Bugs to protect them.

QUEEN

The larger hives will have a Queen controlling the Bugs, and laying eggs to increase the number of invaders on the ground. They are protected by an army of guards and soldiers and will not be as easy to kill as most other enemies. Some queens will have to be attacked in certain locations to weaken them. They normally will not leave the hatchery unless attacked.

HINTS & TIPS

- Mines are incredibly useful, and they're not just for stepping on anymore! You can throw them to blast open doors, bust up rocks and access secret areas, even to blow your enemies to bits! Keep your eyes open for opportunities to use them.
- When a special weapon is powered up, **HOLD** the fire weapon control for exciting new ways to destroy your enemies!
- In order to power the environmental weapons up to their maximum, grab the pick up at least twice and then hold the **FIRE BUTTON** down for 3 seconds..
- Keep an eye on your scanner! Enemies may attack from all angles, and could be lurking anywhere.
- Each level has its own mission and sub missions. You will need to complete each one before progressing to the next level.
- If you are guiding civilians to a safe zone, watch your fire. Civilians are harmed by your weapons just as the Bugs are.
- Look everywhere for pick-ups – they may be well hidden, or contained within destructible items.
- Be careful when blowing away Bug Eggs – some are ready to hatch!
- In Cooperative mode, the first player to enter a warp to the next level will take both players through to the next level. Some of these are one way warps—another good reason to stay together and work as a team!
- Don't waste your explosive projectiles!!
- **FOLLOW ON SCREEN INSTRUCTIONS.** You will regularly receive vital clues and information from on-screen text messages. You will not be able to finish the game if you ignore them.
- Use the **MOVE FORWARD** and **MOVE BACKWARDS BUTTONS** to speed up or slow down vehicles.

For the hottest hints and codes on Acclaim Titles **Please call 1-900-407-Tips(8477)**

The cost of the call is $.95 per minute. You must be 18 or have parental permission and have a touch-tone phone.

NOTES

NOTES

ACCLAIM® LIMITED WARRANTY

ACCLAIM warrants to the original purchaser only of this ACCLAIM software product that the medium on which this software program is recorded is free from defects in materials and workmanship for a period of ninety (90) days from the date of purchase. This ACCLAIM software program is sold "as is," without express or implied warranty of any kind, and ACCLAIM is not liable for any losses or damages of any kind resulting from use of this program. ACCLAIM agrees for a period of ninety (90) days to either repair or replace, at its option, free of charge, any ACCLAIM software product, postage paid, with proof of date of purchase, at its Factory Service Center. Replacement of the software product, free of charge to the original purchaser (except for the cost of returning the software product) is the full extent of our liability.

This warranty is not applicable to normal wear and tear. This warranty shall not be applicable and shall be void if the defect in the ACCLAIM software product has arisen through abuse, unreasonable use, mistreatment or neglect. THIS WARRANTY IS IN LIEU OF ALL OTHER WARRANTIES AND NO OTHER REPRESENTATIONS OR CLAIMS OF ANY NATURE SHALL BE BINDING ON OR OBLIGATE ACCLAIM. ANY IMPLIED WARRANTIES APPLICABLE TO THIS SOFTWARE PRODUCT, INCLUDING WARRANTIES OF MERCHANTABILITY AND FITNESS FOR A PARTICULAR PURPOSE, ARE LIMITED TO THE NINETY (90) DAY PERIOD DESCRIBED ABOVE. IN NO EVENT WILL ACCLAIM BE LIABLE FOR ANY SPECIAL, INCIDENTAL, OR CONSEQUENTIAL DAMAGES RESULTING FROM POSSESSION, USE OR MALFUNCTION OF THIS ACCLAIM SOFTWARE PRODUCT.

Some states do not allow limitations as to how long an implied warranty lasts and/or exclusions or limitations of incidental or consequential damages so the above limitations and/or exclusions of liability may not apply to you. This warranty gives you specific rights, and you may also have other rights which vary from state to state.

This warranty shall not be applicable to the extent that any provision of this warranty is prohibited by any federal, state or municipal law which cannot be pre-empted.

Repairs/Service after Expiration of Warranty–If your software product requires repair after expiration of the 90-day Limited Warranty Period, you may contact the Consumer Service Department at the number listed below. You will be advised of the estimated cost of repair and the shipping instructions.

Acclaim Hotline/Consumer Service Department (516) 759-7800

ARMORINES: PROJECT SWARM™ and Acclaim® & © 2000 Acclaim Entertainment, Inc. All Rights Reserved. Developed by Acclaim Studios London. All Rights Reserved. Jeremy McGrath SUPERCROSS™ 2000 and Acclaim® & © 2000 Acclaim Entertainment, Inc. All Rights Reserved. Developed by Acclaim Studios Salt Lake City. All Rights Reserved. "No Fear"® is a registered trademark of No Fear, Inc. Marketed by Acclaim. Distributed by Acclaim Distribution, Inc., One Acclaim Plaza, Glen Cove, NY 11542-2777.

www.acclaim.com

LOOK FOR

JEREMY McGRATH SUPERCROSS™ 2000

EVERYONE
E
CONTENT RATED BY ESRB

MCGRATH

NO FEAR

Acclaim® SPORTS™

www.acclaimsports.com

Acclaim® & © 2000 Acclaim Entertainment, Inc. All Rights Reserved. Marketed by Acclaim. Distributed by Acclaim Distribution, Inc. One Acclaim Plaza, Glen Cove, NY 11542-2777.
Licensed by Sony Computer Entertainment America for use with the PlayStation game console. PlayStation and the PlayStation logos are registered trademarks of Sony Computer Entertainment Inc. The ratings icon is a trademark of the Interactive Digital Software Association. Manufactured and printed in the U.S.A. THIS SOFTWARE IS COMPATIBLE WITH PLAYSTATION GAME CONSOLES WITH THE NTSC U/C DESIGNATION. U.S. AND FOREIGN PATENTS PENDING.

PlayStation®